ardmak

ALÜMİNYUM

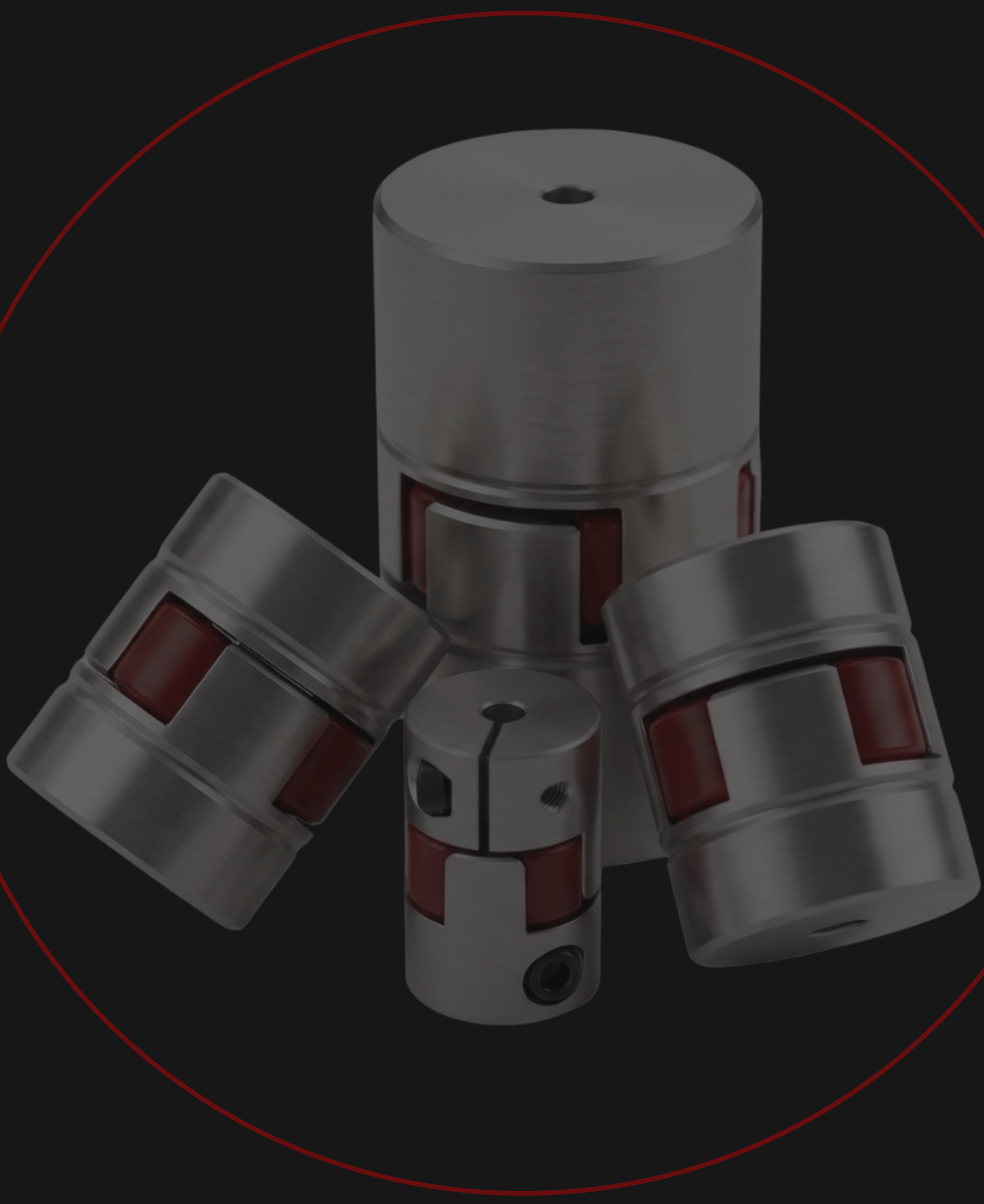

Kaplinler

Couplings

www.ardmakina.com

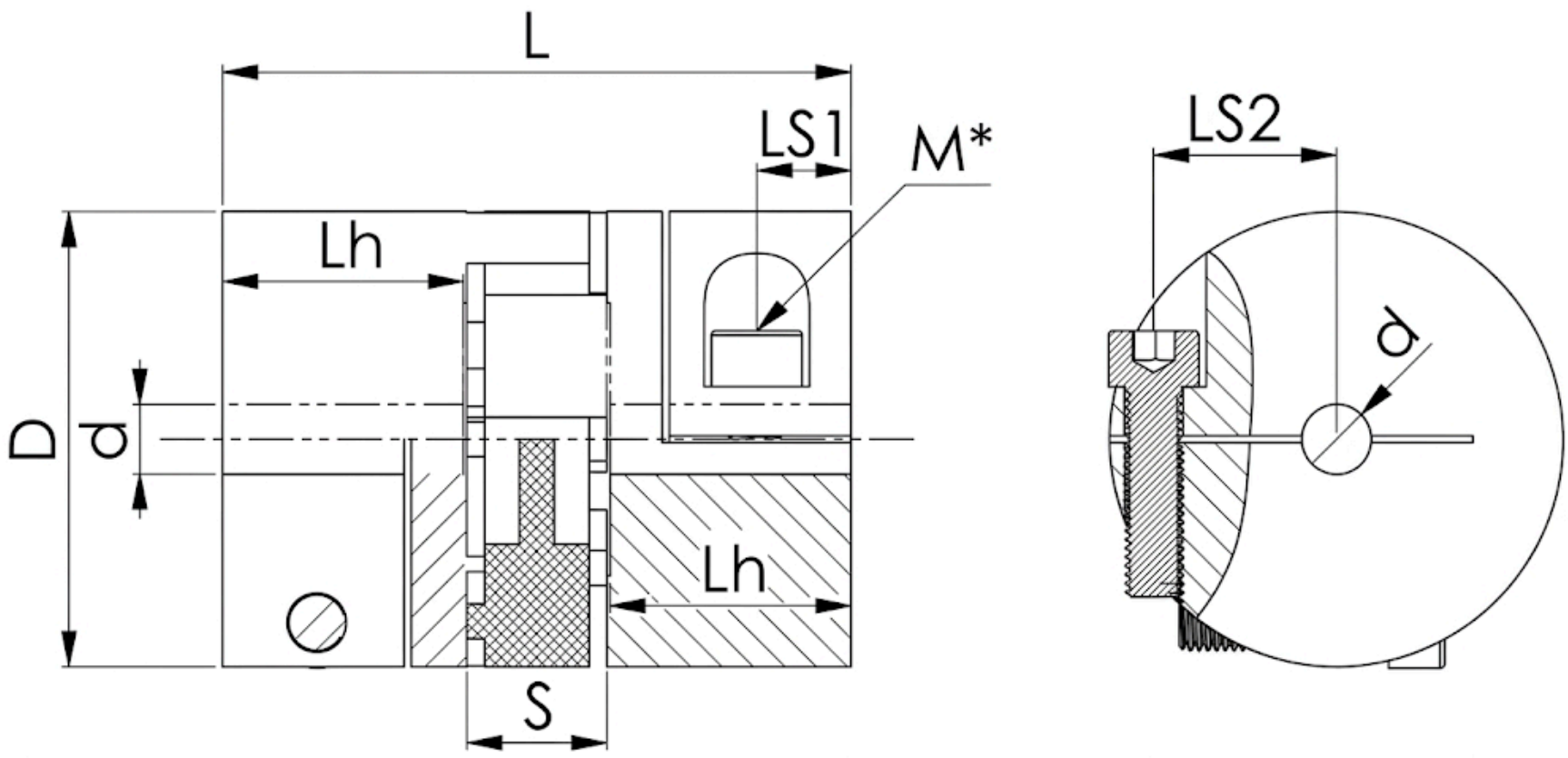

TEKNİK DETAYLAR

Kod (Code)	d	d max.	D	L	LS1	LS2	S	M*
RK-09	4	9	20	30	5	7,3	10	M3
RK-14	6	14	30	35	5	11	13	M3
RK-19	8	19	40	66	11	14,5	16	M6
RK-24	10	24	55	78	10,5	20	18	M6
RK-28	10	28	65	90	11	24,5	20	M8
RK-38	15	38	80	114	15,5	30	24	M8
RK-42	22	42	95	126	18	32,5	26	M10



ardmak

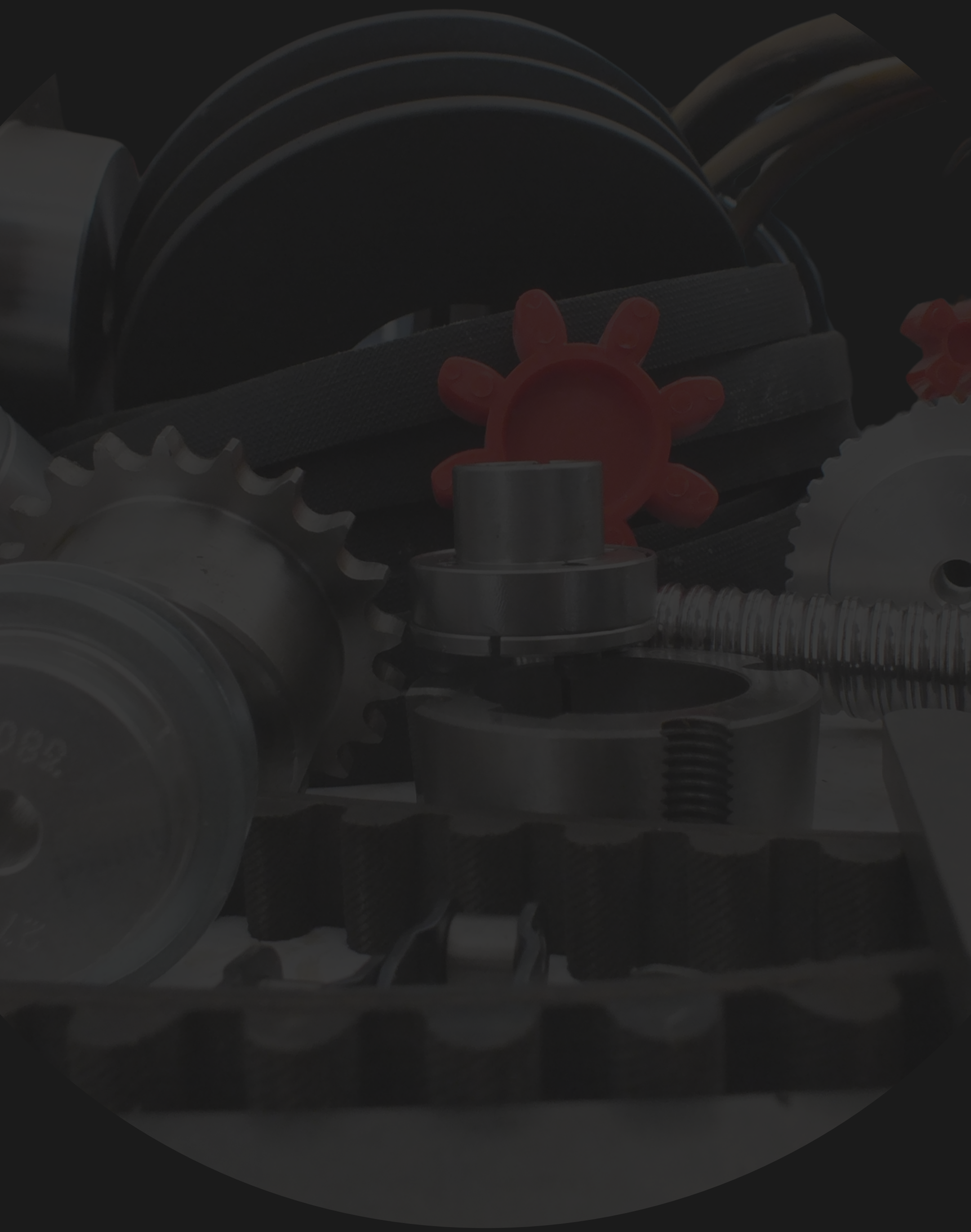

www.ardmakina.com
ard@ardmakina.com
0332 248 64 60