ardmak



Konik Kilitler (Kamasız Burçlar)

Taper Lock Bushings (Keyless Bushings)

KONİK KİLİTLER (KAMASIZ BURÇLAR)

Taper Lock Bushings (Keyless Bushings)

100 Kamasız Burçlar 100 Taper Lock Bushings

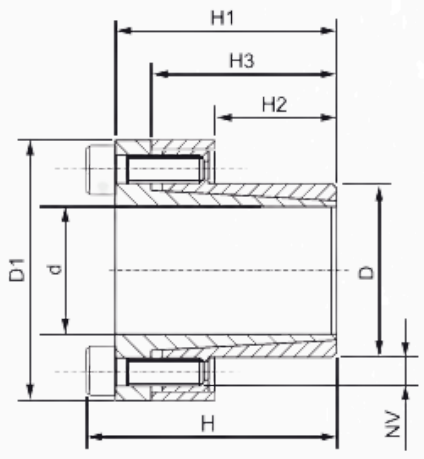



KB-100

Kod (Code)	d	D	D1	H	H1	H2	H3	NV
KB100-8	8	15	28	28	24	12	21	M4x10x4
KB100-9	9	16	32	31	27	14	23	M4x12x4
KB100-10	10	16	32	31	27	14	23	M4x12x4
KB100-11	11	18	34	31	27	14	23	M4x12x4
KB100-12	12	18	34	31	27	14	23	M4x12x4
KB100-14	14	23	39	31	27	14	23	M4x12x4
KB100-15	15	24	45	42	36	16	29	M6x18x3
KB100-16	16	24	45	42	36	16	29	M6x18x3
KB100-18	18	26	47	44	38	18	31	M6x18x4
KB100-19	19	27	48	44	38	18	31	M6x18x4
KB100-20	20	28	49	44	38	18	31	M6x18x4
KB100-22	22	32	54	51	45	25	38	M6x18x4
KB100-24	24	34	56	51	45	25	38	M6x18x4
KB100-25	25	34	56	51	45	25	38	M6x18x4
KB100-28	28	39	61	51	45	25	38	M6x18x5
KB100-30	30	41	63	51	45	25	38	M6x18x6
KB100-32	32	43	65	56	50	30	43	M6x18x6
KB100-35	35	47	69	56	50	30	43	M6x18x8
KB100-38	38	50	72	56	50	30	43	M6x18x8
KB100-40	40	53	75	58	52	32	45	M6x18x9
KB100-42	42	55	77	58	52	32	45	M6x18x9
KB100-45	45	59	85	72	64	40	56	M8x22x8
KB100-48	48	62	88	72	64	40	56	M8x22x8
KB100-50	50	65	92	82	74	50	66	M8x22x10
KB100-55	55	71	98	82	74	50	66	M8x22x10
KB100-60	60	77	104	82	74	50	66	M8x22x10
KB100-65	65	84	111	82	74	50	66	M8x22x10
KB100-70	70	90	122	101	91	60	80	M10x25x8
KB100-75	75	95	126	101	91	60	80	M10x25x9
KB100-80	80	100	131	106	96	65	85	M10x25x12
KB100-85	85	106	137	106	96	65	85	M10x25x12
KB100-90	90	112	143	106	96	65	85	M10x25x14
KB100-95	95	120	153	106	96	65	85	M10x25x14
KB100-100	100	125	162	114	102	65	89	M12x30x12
KB100-110	110	140	177	119	107	70	94	M12x30x12
KB100-120	120	155	195	139	127	90	114	M12x30x16
KB100-130	130	165	205	139	127	90	114	M12x30x16

KONİK KİLİTLER (KAMASIZ BURÇLAR)
Taper Lock Bushings (Keyless Bushings)

150 Kamasız Burçlar 150 Taper Lock Bushings

KB-150

Kod (Code)	d	D	H	H1
KB150-6	6	9	4,5	3,7
KB150-7	7	10	4,5	3,7
KB150-8	8	11	4,5	3,7
KB150-9	9	12	4,5	3,7
KB150-10	10	13	4,5	3,7
KB150-12	12	15	4,5	3,7
KB150-13	13	16	4,5	3,7
KB150-14	14	18	6,3	5,3
KB150-15	15	19	6,3	5,3
KB150-16	16	20	6,3	5,3
KB150-17	17	21	6,3	5,3
KB150-18	18	22	6,3	5,3
KB150-19	19	24	6,3	5,3
KB150-20	20	25	6,3	5,3
KB150-22	22	26	6,3	5,3
KB150-24	24	28	6,3	5,3
KB150-25	25	30	6,3	5,3
KB150-28	28	32	6,3	5,3
KB150-30	30	35	6,3	5,3
KB150-32	32	36	6,3	5,3
KB150-35	35	40	7	6
KB150-36	36	42	7	6
KB150-38	38	44	7	6
KB150-40	40	45	8	6,6
KB150-42	42	48	8	6,6
KB150-45	45	52	10	8,6
KB150-48	48	55	10	8,6
KB150-50	50	57	10	8,6
KB150-55	55	62	10	8,6
KB150-56	56	64	12	10,4
KB150-60	60	68	12	10,4
KB150-63	63	71	12	10,4
KB150-65	65	73	12	10,4
KB150-70	70	79	14	12,2
KB150-71	71	80	14	12,2
KB150-75	75	84	14	12,2
KB150-80	80	91	17	15
KB150-85	85	96	17	15
KB150-90	90	101	17	15
KB150-100	100	114	21	18,7
KB150-110	110	124	21	18,7

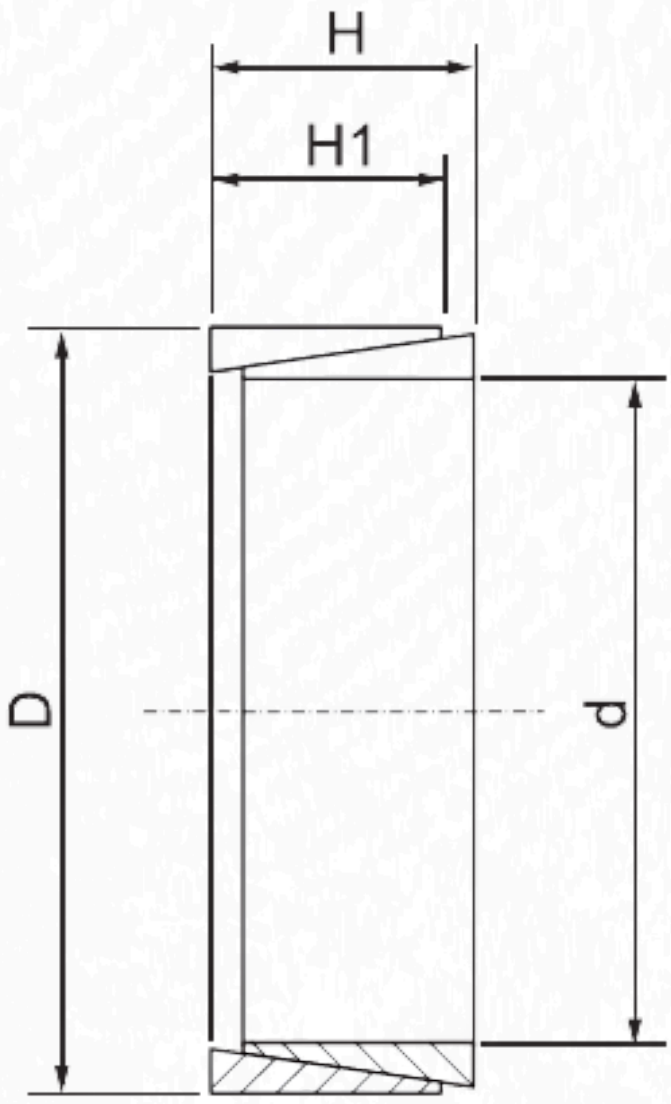



KONİK KİLİTLER (KAMASIZ BURÇLAR)
Taper Lock Bushings (Keyless Bushings)

200 Kamasız Burçlar — 200 Taper Lock Bushings



KB-200

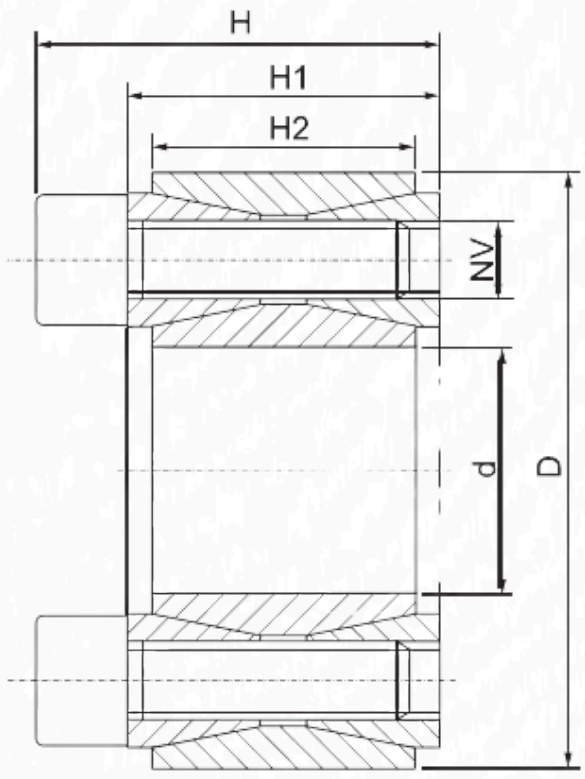

Kod (Code)	d	D	H	H1	H2	NV
KB200-18	18	47	26	20	17	M6x18x8
KB200-19	19	47	26	20	17	M6x18x8
KB200-20	20	47	26	20	17	M6x18x8
KB200-22	22	47	26	20	17	M6x18x8
KB200-24	24	50	26	20	17	M6x18x8
KB200-25	25	50	26	20	17	M6x18x8
KB200-28	28	55	26	20	17	M6x18x10
KB200-30	30	55	26	20	17	M6x18x10
KB200-32	32	60	26	20	17	M6x18x12
KB200-35	35	60	26	20	17	M6x18x12
KB200-38	38	65	26	20	17	M6x18x14
KB200-40	40	65	26	20	17	M6x18x14
KB200-42	42	75	32	24	20	M8x22x12
KB200-45	45	75	32	24	20	M8x22x12
KB200-48	48	80	32	24	20	M8x22x12
KB200-50	50	80	32	24	20	M8x22x12
KB200-55	55	85	32	24	20	M8x22x14
KB200-60	60	90	32	24	20	M8x22x14
KB200-65	65	95	32	24	20	M8x22x16
KB200-70	70	110	38	28	24	M10x25x14
KB200-75	75	115	38	28	24	M10x25x14
KB200-80	80	120	38	28	24	M10x25x14
KB200-85	85	125	38	28	24	M10x25x16

Kod (Code)	d	D	H	H1	H2	NV
KB200-90	90	130	38	28	24	M10x25x16
KB200-95	95	135	38	28	24	M10x25x18
KB200-100	100	145	45	33	26	M12x30x14
KB200-110	110	155	45	33	26	M12x30x14
KB200-120	120	165	45	33	26	M12x30x16
KB200-130	130	180	50	38	34	M12x35x20
KB200-140	140	190	50	38	34	M12x35x22
KB200-150	150	200	50	38	34	M12x35x24
KB200-160	160	210	50	38	34	M12x35x26
KB200-170	170	225	58	44	38	M14x40x22
KB200-180	180	235	58	44	38	M14x40x24
KB200-190	190	250	66	52	46	M14x45x28
KB200-200	200	260	66	52	46	M14x45x30
KB200-220	220	285	72	56	50	M16x50x26
KB200-240	240	305	72	56	50	M16x50x30
KB200-260	260	325	72	56	50	M16x50x34
KB200-280	280	355	84	66	60	M18x60x32
KB200-300	300	375	84	66	60	M18x60x36
KB200-320	320	405	98	78	72	M20x70x32
KB200-340	340	425	98	78	72	M20x70x36
KB200-360	360	455	112	90	84	M22x80x36
KB200-380	380	475	112	90	84	M22x80x36
KB200-400	400	495	112	90	84	M22x80x36

KONİK KİLİTLER (KAMASIZ BURÇLAR)
Taper Lock Bushings (Keyless Bushings)

210 Kamasız Burçlar — 210 Taper Lock Bushings

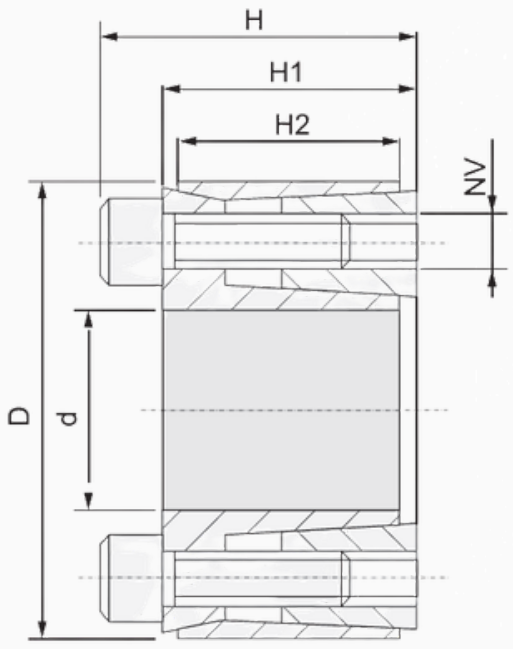



KB-210

Kod (Code)	d	D	H	H1	H2	NV
KB210-16	16	32	21	17	14	M6x16x4
KB210-18	18	40	24	18	15	M6x16x4
KB210-19	19	41	24	18	15	M6x16x4
KB210-20	20	42	24	18	15	M6x16x4
KB210-22	22	44	24	18	15	M6x16x4
KB210-24	24	46	24	18	15	M6x16x6
KB210-25	25	47	24	18	15	M6x16x6
KB210-28	28	50	24	18	15	M6x16x6
KB210-30	30	52	24	18	15	M6x16x6
KB210-32	32	54	24	18	15	M6x18x6
KB210-35	35	57	28	22	18	M6x18x8
KB210-36	36	58	28	22	18	M6x18x8
KB210-38	38	60	28	22	18	M8x25x8
KB210-40	40	62	28	22	18	M8x25x8
KB210-42	42	70	36	28	24	M8x25x8
KB210-45	45	73	36	28	24	M8x25x8
KB210-48	48	76	36	28	24	M8x25x8
KB210-50	50	78	36	28	24	M8x25x8
KB210-55	55	83	36	28	24	M8x25x9
KB210-60	60	88	36	28	24	M8x25x9
KB210-65	65	93	36	28	24	M8x25x9
KB210-70	70	105	45	35	30	M10x30x9
KB210-75	75	110	45	35	30	M10x30x9
KB210-80	80	115	45	35	30	M10x30x9
KB210-85	85	120	45	35	30	M10x30x10
KB210-90	90	125	45	35	30	M10x30x10
KB210-95	95	138	45	35	30	M10x30x10
KB210-100	100	138	45	35	30	M10x30x10

KONİK KİLİTLER (KAMASIZ BURÇLAR)
Taper Lock Bushings (Keyless Bushings)

250 Kamasız Burçlar 250 Taper Lock Bushings

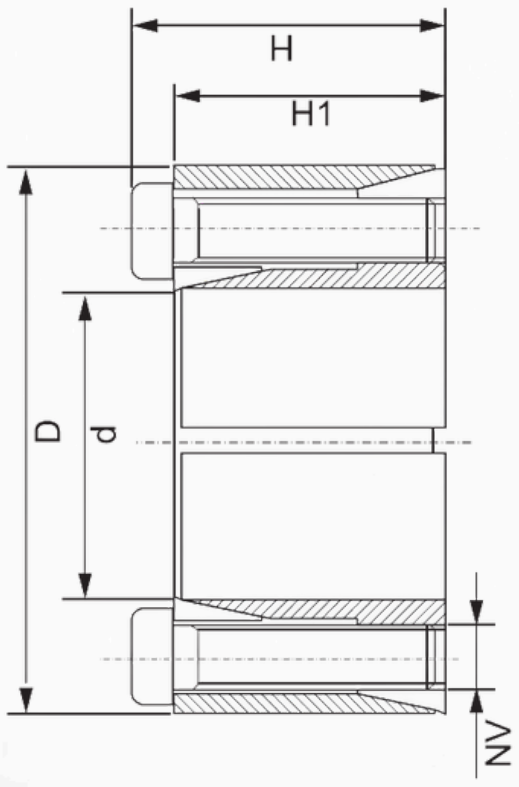



KB-250

Kod (Code)	d	D	H	H1	NV
KB250-5	5	16	13,5	11	M2,5x10x3
KB250-6	6	16	13,5	11	M2,5x10x3
KB250-8	8	18	13,5	11	M2,5x10x3
KB250-9	9	20	15,5	13	M2,5x12x4
KB250-10	10	20	15,5	13	M2,5x12x4
KB250-11	11	22	15,5	13	M2,5x12x4
KB250-12	12	22	15,5	13	M2,5x12x4
KB250-14	14	26	20	17	M3x16x4
KB250-15	15	28	20	17	M3x16x4
KB250-16	16	32	21	17	M3x16x4
KB250-17	17	35	25	21	M4x20x4
KB250-18	18	35	25	21	M4x20x4
KB250-19	19	35	25	21	M4x20x4
KB250-20	20	38	26	21	M4x20x4
KB250-22	22	40	26	21	M4x20x4
KB250-24	24	47	32	26	M6x24x4
KB250-25	25	47	32	26	M6x24x4
KB250-28	28	50	32	26	M6x24x6
KB250-30	30	55	35	29	M6x24x6
KB250-32	32	55	35	29	M6x24x6

Kod (Code)	d	D	H	H1	NV
KB250-35	35	60	37	31	M6x30x8
KB250-38	38	65	37	31	M6x30x8
KB250-40	40	65	37	31	M6x30x8
KB250-42	42	75	44	36	M8x35x6
KB250-45	45	75	44	36	M8x35x6
KB250-48	48	80	44	36	M8x35x8
KB250-50	50	80	44	36	M8x35x8
KB250-55	55	85	44	36	M8x35x8
KB250-60	60	90	44	36	M8x35x8
KB250-65	65	95	44	36	M8x35x9
KB250-70	70	110	58	48	M10x45x8
KB250-75	75	115	58	48	M10x45x8
KB250-80	80	120	58	48	M10x45x8
KB250-85	85	125	58	48	M10x45x9
KB250-90	90	130	58	48	M10x45x9
KB250-95	95	135	58	48	M10x45x10
KB250-100	100	145	68	56	M12x50x8
KB250-110	110	155	68	56	M12x50x8
KB250-120	120	165	68	56	M12x50x9
KB250-130	130	180	80	68	M12x65x10

KONİK KİLİTLER (KAMASIZ BURÇLAR)
Taper Lock Bushings (Keyless Bushings)

300 Kamasız Burçlar 300 Taper Lock Bushings

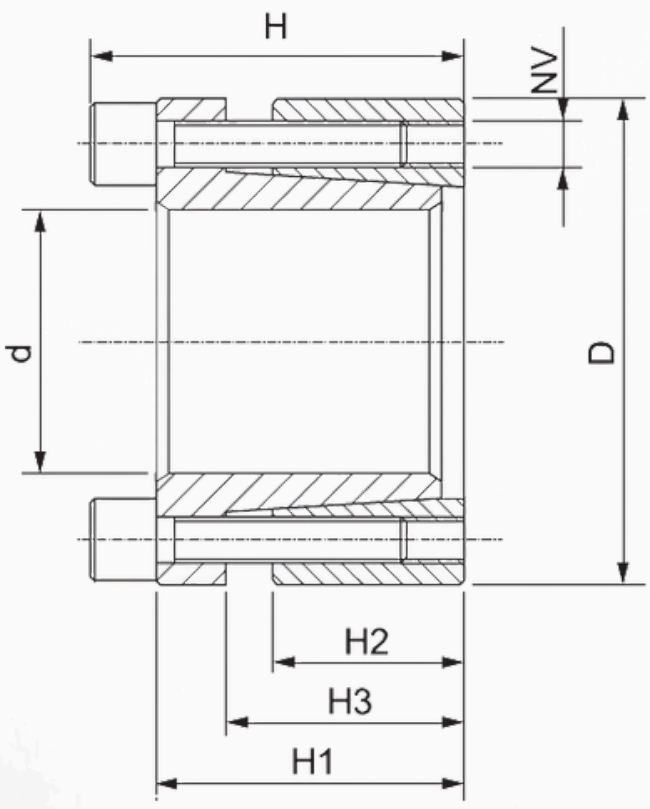



KB-300

Kod (Code)	d	D	H	H1	H2	NV
KB300-14	14	32	25	21	14	M4x15x4
KB300-15	15	32	25	21	14	M4x15x4
KB300-16	16	32	25	21	14	M4x15x4
KB300-18	18	47	34	28	17	M6x20x6
KB300-19	19	47	34	28	17	M6x20x6
KB300-20	20	47	34	28	17	M6x20x6
KB300-22	22	47	34	28	17	M6x20x6
KB300-24	24	50	34	28	17	M6x20x6
KB300-25	25	50	34	28	17	M6x20x6
KB300-28	28	55	34	28	17	M6x20x6
KB300-30	30	55	34	28	17	M6x20x6
KB300-32	32	60	34	28	17	M6x20x8
KB300-35	35	60	34	28	17	M6x20x8
KB300-38	38	65	34	28	17	M6x20x8
KB300-40	40	65	34	28	17	M6x20x8
KB300-42	42	75	41	33	20	M8x25x8
KB300-45	45	75	41	33	20	M8x25x8
KB300-48	48	80	41	33	20	M8x25x8
KB300-50	50	80	41	33	20	M8x25x8
KB300-55	55	85	41	33	20	M8x25x8
KB300-60	60	90	41	33	20	M8x25x8
KB300-65	65	95	41	33	20	M8x25x10
KB300-70	70	110	50	40	24	M10x30x8
KB300-75	75	115	50	40	24	M10x30x8
KB300-80	80	120	50	40	24	M10x30x8

Kod (Code)	d	D	H	H1	H2	NV
KB300-85	85	125	50	40	24	M10x30x10
KB300-90	90	130	50	40	24	M10x30x10
KB300-95	95	135	50	40	24	M10x30x10
KB300-100	100	145	56	44	26	M12x35x8
KB300-110	110	155	56	44	26	M12x35x8
KB300-120	120	165	56	44	26	M12x35x10
KB300-130	130	180	66	54	34	M12x35x12
KB300-140	140	190	68	54	34	M14x40x10
KB300-150	150	200	68	54	34	M14x40x10
KB300-160	160	210	68	54	34	M14x40x12
KB300-170	170	225	78	64	44	M14x40x12
KB300-180	180	235	78	64	44	M14x40x12
KB300-190	190	250	78	64	44	M14x40x16
KB300-200	200	260	78	64	44	M14x40x16
KB300-220	220	285	89	73	50	M16x45x12
KB300-240	240	305	89	73	50	M16x45x15
KB300-260	260	325	89	73	50	M16x45x18
KB300-280	280	355	103	85	60	M18x50x16
KB300-300	300	375	103	85	60	M18x50x18
KB300-320	320	405	122	102	74	M20x50x18
KB300-340	340	425	122	102	74	M20x50x21
KB300-360	360	455	138	116	86	M22x60x18
KB300-380	380	475	138	116	86	M22x60x21
KB300-400	400	495	138	116	86	M22x60x21

KONİK KİLİTLER (KAMASIZ BURÇLAR)
Taper Lock Bushings (Keyless Bushings)

301 Kamasız Burçlar 301 Taper Lock Bushings

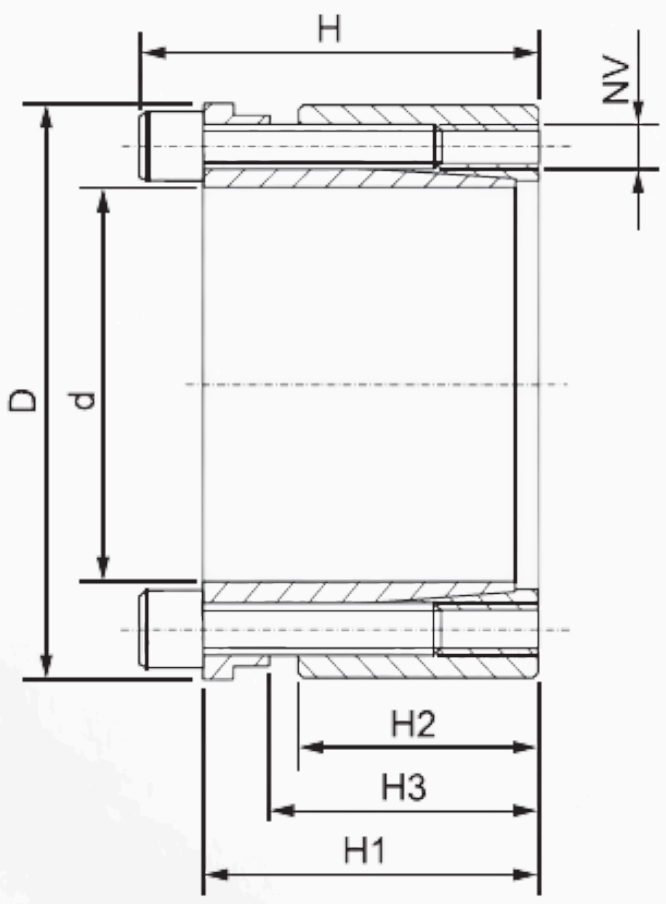



KB-301

Kod (Code)	d	D	H	H1	H2	NV
KB301-19	19	47	47	41	26	M6x25x6
KB301-20	20	47	47	41	26	M6x25x6
KB301-22	22	47	47	41	26	M6x25x6
KB301-24	24	50	47	41	26	M6x25x6
KB301-25	25	50	47	41	26	M6x25x6
KB301-28	28	55	47	41	26	M6x25x6
KB301-30	30	55	47	41	26	M6x25x6
KB301-32	32	60	47	41	26	M6x25x6
KB301-35	35	60	47	41	26	M6x25x8
KB301-38	38	65	47	41	26	M6x25x8
KB301-40	40	65	47	41	26	M6x25x8
KB301-42	42	75	57	49	30	M8x30x8
KB301-45	45	75	57	49	30	M8x30x6
KB301-48	48	80	57	49	30	M8x30x6
KB301-50	50	80	57	49	30	M8x30x8
KB301-55	55	85	57	49	30	M8x30x8
KB301-60	60	90	57	49	30	M8x30x8
KB301-65	65	95	57	49	30	M8x30x8
KB301-70	70	110	69	59	40	M10x35x8
KB301-75	75	115	69	59	40	M10x35x8

Kod (Code)	d	D	H	H1	H2	NV
KB301-80	80	120	69	59	40	M10x35x8
KB301-85	85	125	69	59	40	M10x35x8
KB301-75	90	130	69	59	40	M10x35x10
KB301-95	95	135	69	59	40	M10x35x10
KB301-100	100	145	80	68	46	M12x45x10
KB301-110	110	155	80	68	46	M12x45x8
KB301-120	120	165	80	68	46	M12x45x8
KB301-130	130	180	80	68	46	M12x45x10
KB301-140	140	190	90	76	50	M14x45x12
KB301-150	150	200	90	76	50	M14x45x10
KB301-160	160	210	90	76	50	M14x45x12
KB301-170	170	225	90	76	50	M14x45x12
KB301-180	180	235	90	76	50	M14x45x14
KB301-190	190	250	90	76	50	M14x45x14
KB301-200	200	260	90	76	50	M14x45x16
KB301-220	220	285	114	98	64	M16x60x16
KB301-240	240	305	114	98	64	M16x60x12
KB301-260	260	325	114	98	64	M16x60x16
KB301-280	280	355	139	121	75	M18x70x18
KB301-300	300	375	139	121	75	M18x70x16

KONİK KİLİTLER (KAMASIZ BURÇLAR)
Taper Lock Bushings (Keyless Bushings)

310 Kamasız Burçlar — 310 Taper Lock Bushings

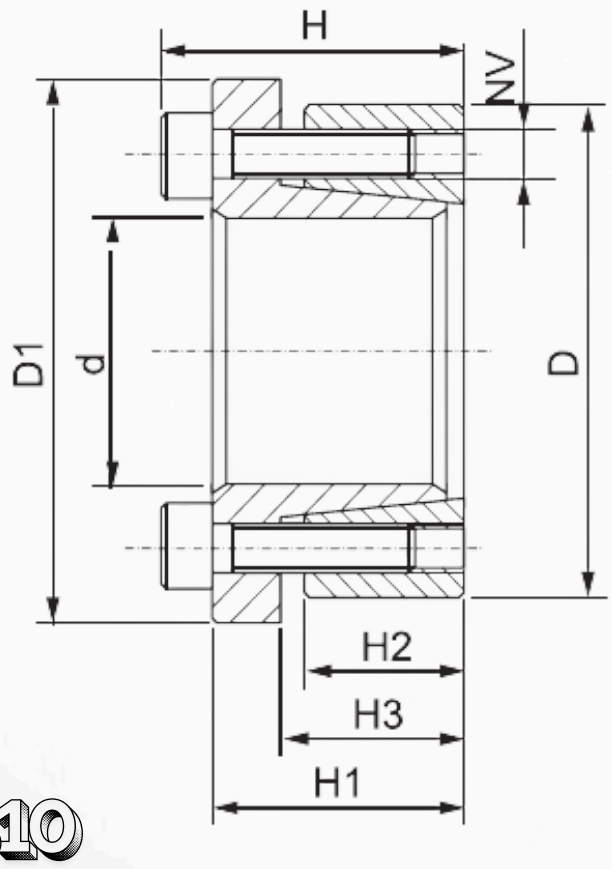



KB-310

Kod (Code)	d	D	D1	H	H1	H2	H3	NV	TV
KB311-14	14	55	62	39	31	17	22	M8x25x4	x
KB311-16	16	55	62	39	31	17	22	M8x25x4	x
KB311-18	18	55	62	39	31	17	22	M8x25x4	x
KB311-19	19	55	62	39	31	17	22	M8x25x4	x
KB311-20	20	55	62	39	31	17	22	M8x25x4	x
KB311-22	22	55	62	39	31	17	22	M8x25x4	x
KB311-24	24	55	62	39	31	17	22	M8x25x4	x
KB311-25	25	55	62	39	31	17	22	M8x25x4	x
KB311-28	28	55	62	39	31	17	22	M8x25x4	x
KB311-30	30	55	62	39	31	17	22	M8x25x4	x
KB312-24	24	65	72	39	31	17	22	M8x25x5	x
KB312-25	25	65	72	39	31	17	22	M8x25x5	x
KB312-28	28	65	72	39	31	17	22	M8x25x5	x
KB312-30	30	65	72	39	31	17	22	M8x25x5	x
KB312-32	32	65	72	39	31	17	22	M8x25x5	x
KB312-35	35	65	72	39	31	17	22	M8x25x5	x
KB312-38	38	65	72	39	31	17	22	M8x25x5	x
KB312-40	40	65	72	39	31	17	22	M8x25x5	x
KB313-30	30	80	87	41	33	20	25	M8x25x7	x
KB313-32	32	80	87	41	33	20	25	M8x25x7	x
KB313-35	35	80	87	41	33	20	25	M8x25x7	x
KB313-38	38	80	87	41	33	20	25	M8x25x7	x
KB313-40	40	80	87	41	33	20	25	M8x25x7	x
KB313-42	42	80	87	41	33	20	25	M8x25x7	x
KB313-45	45	80	87	41	33	20	25	M8x25x7	x
KB313-48	48	80	87	41	33	20	25	M8x25x7	x
KB313-50	50	80	87	41	33	20	25	M8x25x7	x

KONİK KİLİTLER (KAMASIZ BURÇLAR)
Taper Lock Bushings (Keyless Bushings)

330 Kamasız Burçlar 330 Taper Lock Bushings

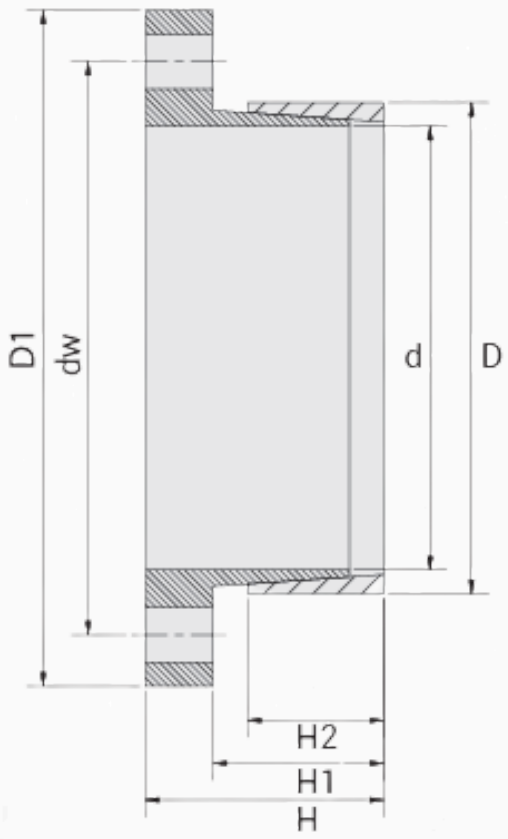



KB-330

Kod (Code)	d	D	D1	H	H1	H2	H3	NV
KB330-14	14	25	42	26	20	16	33	M4X20x4
KB330-15	15	25	42	26	20	16	33	M4X20x4
KB330-16	16	25	42	26	20	16	33	M4X20x4
KB330-18	18	25	42	26	20	16	33	M4X20x4
KB330-19	19	25	42	26	20	16	33	M4X20x4
KB330-20	20	30	50	26	20	16	39	M5X20x4
KB330-22	22	30	50	26	20	16	39	M5X20x4
KB330-24	24	30	50	26	20	16	39	M5X20x4
KB330-25	25	36	55	26	20	16	45	M5X20x4
KB330-28	28	36	55	26	20	16	45	M5X20x4
KB330-30	30	36	55	26	20	16	45	M5X20x4
KB330-32	32	42	62	28	20	16	51	M5X20x4
KB330-35	35	42	62	28	20	16	51	M5X20x4
KB330-36	36	42	62	28	20	16	51	M5X20x4
KB330-38	38	44	66	28	20	16	54	M6X20x4
KB330-40	40	48	70	28	20	16	58	M6X20x4
KB330-42	42	48	70	28	20	16	58	M6X20x4
KB330-45	45	55	82	35	25	20	67	M8X28x4
KB330-48	48	55	82	35	25	20	67	M8X28x4
KB330-50	50	62	89	35	25	20	74	M8X28x4
KB330-55	55	62	89	35	25	20	74	M8X28x4
KB330-60	60	72	99	35	25	20	84	M8X28x4
KB330-65	65	72	99	35	25	20	84	M8X28x4

KONİK KİLİTLER (KAMASIZ BURÇLAR)
Taper Lock Bushings (Keyless Bushings)

350 Kamasız Burçlar — 350 Taper Lock Bushings

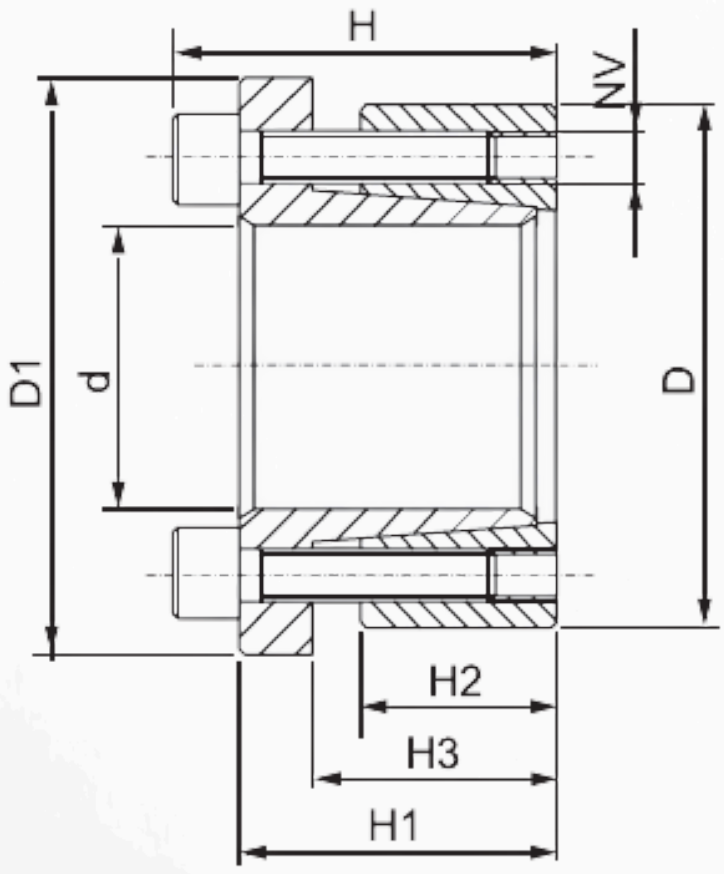



KB-350

Kod (Code)	d	D	D1	H	H1	H2	H3	NV
KB350-14	14	32	41	25	21	14	16	M4x12x4
KB350-15	15	32	41	25	21	14	16	M4x12x4
KB350-16	16	32	41	25	21	14	16	M6x20x4
KB350-18	18	47	56	34	28	17	22	M6x20x6
KB350-19	19	47	56	34	28	17	22	M6x20x6
KB350-20	20	47	56	34	28	17	22	M6x20x6
KB350-22	22	47	59	34	28	17	22	M6x20x6
KB350-24	24	50	59	34	28	17	22	M6x20x6
KB350-25	25	50	59	34	28	17	22	M6x20x6
KB350-28	28	55	64	34	28	17	22	M6x20x6
KB350-30	30	55	64	34	28	17	22	M6x20x6
KB350-32	32	60	69	34	28	17	22	M6x20x8
KB350-35	35	60	69	34	28	17	22	M6x20x8
KB350-38	38	65	74	34	28	17	22	M6x20x8
KB350-40	40	65	74	34	28	17	22	M6x20x8
KB350-42	42	75	84	41	33	20	26	M8x25x8
KB350-45	45	75	84	41	33	20	26	M8x25x8
KB350-48	48	80	89	41	33	20	26	M8x25x8
KB350-50	50	80	89	41	33	20	26	M8x25x8
KB350-55	55	85	94	41	33	20	26	M8x25x8
KB350-60	60	90	99	41	33	20	26	M8x25x8
KB350-65	65	95	104	41	33	20	26	M8x25x10
KB350-70	70	110	119	50	40	24	30	M10x30x8
KB350-75	75	115	124	50	40	24	30	M10x30x8
KB350-80	80	120	129	50	40	24	30	M10x30x8

Kod (Code)	d	D	D1	H	H1	H2	H3	NV
KB350-85	85	125	134	50	40	24	30	M10x30x10
KB350-90	90	130	139	50	40	24	30	M10x30x10
KB350-95	95	135	144	50	40	24	30	M10x30x10
KB350-100	100	145	154	56	44	26	32	M12x35x8
KB350-110	110	155	164	56	44	26	32	M12x35x8
KB350-120	120	165	174	56	44	26	32	M12x35x10
KB350-130	130	180	189	66	54	34	40	M12x35x12
KB350-140	140	190	199	68	54	34	40	M14x40x10
KB350-150	150	200	209	68	54	34	40	M14x40x10
KB350-160	160	210	219	68	54	34	40	M14x40x12
KB350-170	170	225	234	78	64	44	50	M14x40x12
KB350-180	180	235	244	78	64	44	50	M14x40x12
KB350-190	190	250	259	78	64	44	50	M14x40x16
KB350-200	200	260	269	78	64	44	50	M14x40x16
KB350-220	220	285	294	91	75	50	56	M16x45x12
KB350-240	240	305	314	89	73	50	56	M16x45x15
KB350-260	260	325	334	89	73	50	56	M16x45x18
KB350-280	280	355	364	103	85	60	66	M18x50x16
KB350-300	300	375	384	103	85	60	66	M18x50x18
KB350-320	320	405	414	122	102	74	81	M20x50x18
KB350-340	340	425	434	122	102	74	81	M20x50x21
KB350-360	360	455	464	138	116	86	94	M22x60x18
KB350-380	380	475	484	138	116	86	94	M22x60x21
KB350-400	400	495	504	138	116	86	94	M22x60x21

KONİK KİLİTLER (KAMASIZ BURÇLAR)
Taper Lock Bushings (Keyless Bushings)

351 Kamasız Burçlar 351 Taper Lock Bushings

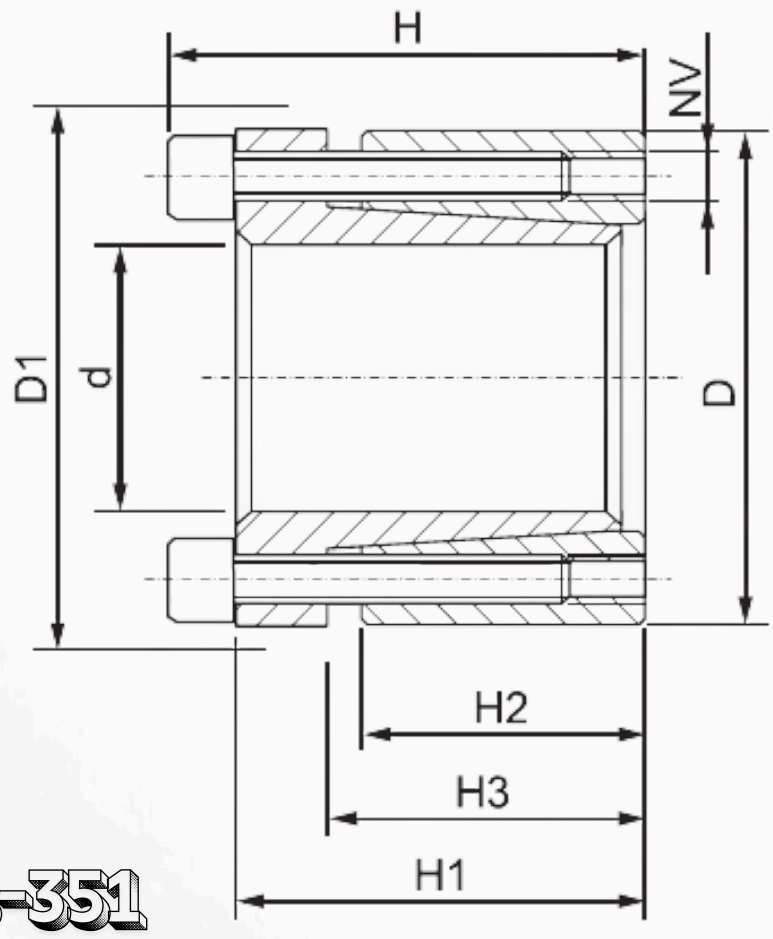



KB-351

Kod (Code)	d	D	D1	H	H1	H2	H3	NV
KB351-19	19	47	53	47	41	26	30	M6x20x6
KB351-20	20	47	53	47	41	26	30	M6x20x6
KB351-22	22	47	53	47	41	26	30	M6x20x6
KB351-24	24	50	56	47	41	26	30	M6x20x6
KB351-25	25	50	56	47	41	26	30	M6x20x6
KB351-28	28	55	61	47	41	26	30	M6x20x6
KB351-30	30	55	61	47	41	26	30	M6x20x6
KB351-32	32	60	66	47	41	26	30	M6x20x6
KB351-35	35	60	66	47	41	26	30	M6x20x8
KB351-38	38	65	71	47	41	26	30	M6x20x8
KB351-40	40	65	71	47	41	26	30	M6x20x8
KB351-42	42	75	81	57	49	30	35	M8x30x8
KB351-45	45	75	81	57	49	30	35	M8x30x6
KB351-48	48	80	86	57	49	30	35	M8x30x6
KB351-50	50	80	86	57	49	30	35	M8x30x8
KB351-55	55	85	91	57	49	30	35	M8x30x8
KB351-60	60	90	96	57	49	30	35	M8x30x8
KB351-65	65	95	102	57	49	30	35	M8x30x8
KB351-70	70	110	117	69	59	40	45	M10x35x8
KB351-75	75	115	122	69	59	40	45	M10x35x8

Kod (Code)	d	D	D1	H	H1	H2	H3	NV
KB351-80	80	120	127	69	59	40	45	M10x35x8
KB351-85	85	125	132	69	59	40	45	M10x35x8
KB351-90	90	130	137	69	59	40	45	M10x35x10
KB351-95	95	135	142	69	59	40	45	M10x35x10
KB351-100	100	145	153	80	68	46	52	M12x45x10
KB351-110	110	155	163	80	68	46	52	M12x45x8
KB351-120	120	165	173	80	68	46	52	M12x45x8
KB351-130	130	180	188	80	68	46	52	M12x45x10
KB351-140	140	190	199	90	76	50	57	M14x45x12
KB351-150	150	200	209	90	76	50	57	M14x45x10
KB351-160	160	210	219	90	76	50	57	M14x45x12
KB351-170	170	225	234	90	76	50	57	M14x45x12
KB351-180	180	235	244	90	76	50	57	M14x45x14
KB351-190	190	250	259	90	76	50	57	M14x45x14
KB351-200	200	260	269	90	76	50	57	M14x45x16
KB351-220	220	285	294	114	98	64	72	M16x60x16
KB351-240	240	305	314	114	98	64	72	M16x60x12
KB351-260	260	325	334	114	98	64	72	M16x60x16
KB351-280	280	355	364	139	121	75	83	M18x70x18
KB351-300	300	375	384	139	121	75	83	M18x70x16

KONİK KİLİTLER (KAMASIZ BURÇLAR)
Taper Lock Bushings (Keyless Bushings)

400 Kamasız Burçlar 400 Taper Lock Bushings

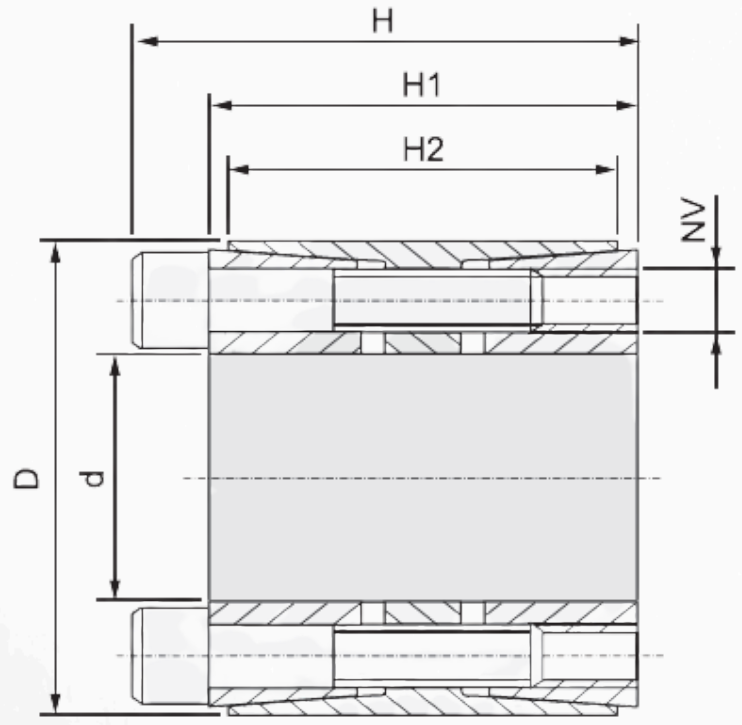



KB-400

Kod (Code)	d	D	H	H1	H2	NV
KB400-70	70	110	72	62	50	M10x50x8
KB400-75	75	115	72	62	50	M10x50x10
KB400-80	80	120	72	62	50	M10x50x10
KB400-85	85	125	72	62	50	M10x50x10
KB400-90	90	130	72	62	50	M10x50x12
KB400-95	95	135	72	62	50	M10x50x12
KB400-100	100	145	84	72	60	M12x60x10
KB400-110	110	155	84	72	60	M12x60x10
KB400-120	120	165	84	72	60	M12x60x12
KB400-130	130	180	94	82	65	M12x70x14
KB400-140	140	190	94	82	65	M12x70x16
KB400-150	150	200	94	82	65	M12x70x16
KB400-160	160	210	94	82	65	M12x70x16
KB400-170	170	225	107	93	78	M14x80x16
KB400-180	180	235	107	93	78	M14x80x16
KB400-190	190	250	119	105	88	M14x90x16
KB400-200	200	260	119	105	88	M14x90x18
KB400-220	220	285	127	111	96	M16x100x16
KB400-240	240	305	127	111	96	M16x100x20
KB400-260	260	325	127	111	96	M16x100x22
KB400-280	280	355	131	111	96	M20x100x16
KB400-300	300	375	131	111	96	M20x100x16
KB400-320	320	405	156	136	124	M20x120x20
KB400-340	340	425	156	136	124	M20x120x20
KB400-360	360	455	177	155	140	M22x140x20
KB400-380	380	475	177	155	140	M22x140x20
KB400-400	400	495	177	155	140	M22x140x22
KB400-420	420	515	177	155	140	M22x140x24

KONİK KİLİTLER (KAMASIZ BURÇLAR)
Taper Lock Bushings (Keyless Bushings)

401 Kamasız Burçlar 401 Taper Lock Bushings

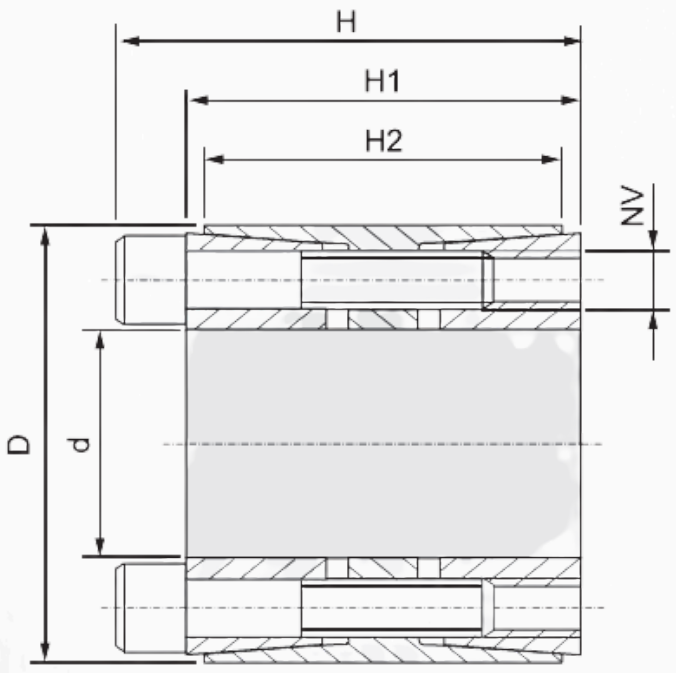

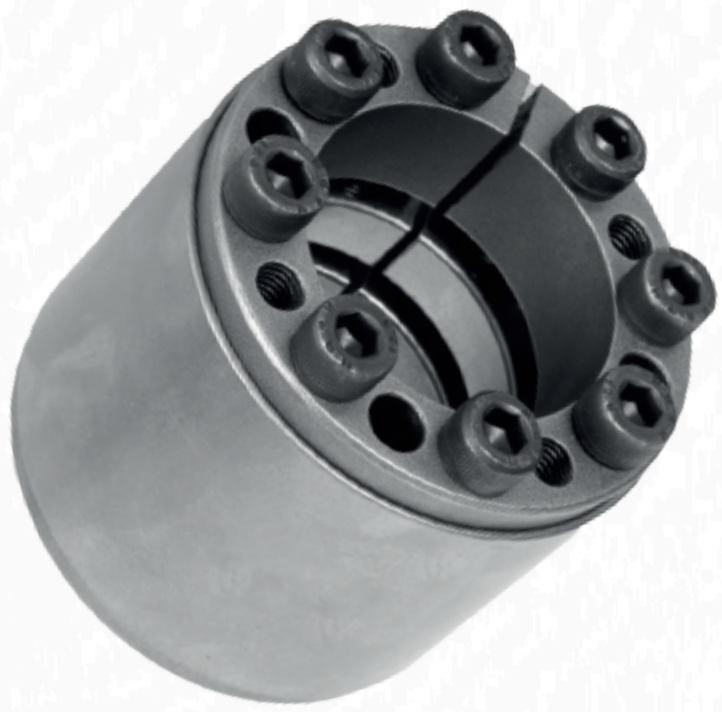

KB-401

Kod (Code)	d	D	H	H1	H2	NV
KB401-24	24	55	46	40	32	M6x35x6
KB401-25	25	55	46	40	32	M6x35x6
KB401-28	28	55	46	40	32	M6x35x6
KB401-30	30	55	46	40	32	M6x35x6
KB401-32	32	60	60	54	44	M6x45x7
KB401-35	35	60	60	54	44	M6x45x7
KB401-38	38	75	62	54	44	M8x50x7
KB401-40	40	75	62	54	44	M8x50x7
KB401-42	42	75	62	54	44	M8x50x7
KB401-45	45	75	62	54	44	M8x50x7
KB401-48	48	80	74	66	56	M8x55x8
KB401-50	50	80	74	66	56	M8x55x8
KB401-55	55	85	74	66	56	M8x55x9
KB401-60	60	90	74	66	56	M8x55x10
KB401-65	65	95	74	66	56	M8x55x10
KB401-70	70	110	90	80	70	M10x60x10
KB401-75	75	115	90	80	70	M10x60x10
KB401-80	80	120	90	80	70	M10x60x11
KB401-85	85	125	90	80	70	M10x60x11
KB401-90	90	130	90	80	70	M10x60x12
KB401-95	95	135	90	80	70	M10x60x12

Kod (Code)	d	D	H	H1	H2	NV
KB401-100	100	145	114	102	90	M12x80x11
KB401-110	110	155	114	102	90	M12x80x12
KB401-120	120	165	114	102	90	M12x80x14
KB401-130	130	180	130	116	104	M14x90x12
KB401-140	140	190	130	116	104	M14x90x14
KB401-150	150	200	130	116	104	M14x90x15
KB401-160	160	210	130	116	104	M14x90x16
KB401-170	170	225	165	149	134	M16x110x14
KB401-180	180	235	165	149	134	M16x110x15
KB401-190	190	250	165	149	134	M16x110x16
KB401-200	200	260	165	149	134	M16x110x16
KB401-220	220	285	166	150	134	M16x110x18
KB401-240	240	305	166	150	134	M16x110x20
KB401-260	260	325	166	150	134	M16x110x21
KB401-280	280	355	197	177	165	M20x130x22
KB401-300	300	375	197	177	165	M20x130x21
KB401-320	320	405	197	177	165	M20x130x21
KB401-340	340	425	197	177	165	M20x130x22
KB401-360	360	455	225	203	190	M22x150x21
KB401-380	380	475	225	203	190	M22x150x22
KB401-400	400	495	225	203	190	M22x150x24

Konik Kilitler (Kamasız Burçlar)

Kamasız burçlar çeşitli ölçülerde ve tiplerde imal edilmektedir. Kasnak, dişli vb. gibi hareket aktarma elemanlarını mille kamasız olarak birleştirmede kullanılmaktadır. Küçük çaplarda imal eidlebildiği gibi büyük çaplarda da imal edilebilir. Büyük mil çaplarında mile kama açma işlemlerinin zorluğu ortadan kalkmaktadır.

KONİK KİLİTLER (KAMASIZ BURÇLAR)
Taper Lock Bushings (Keyless Bushings)

450 Kamasız Burçlar 450 Taper Lock Bushings

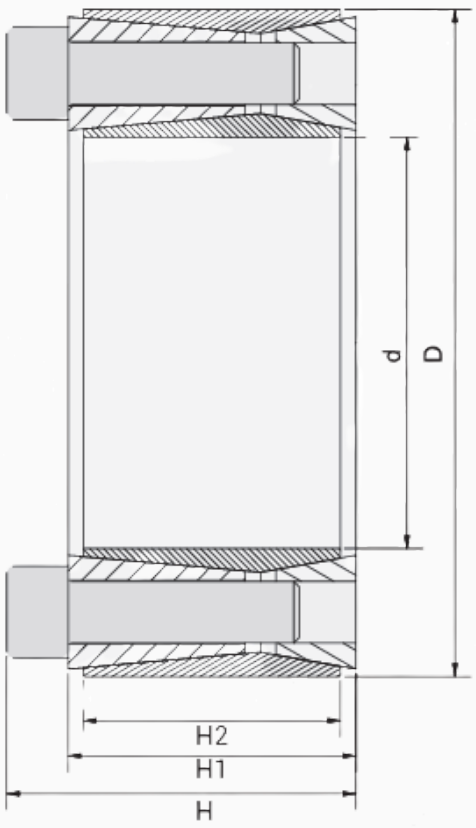



KB-450

Kod (Code)	d	D	H	H1	H2	NV
KB450-70	70	120	74	62	56	M12x55x8
KB450-80	80	130	74	62	56	M12x55x12
KB450-90	90	140	74	62	56	M12x55x12
KB450-100	100	160	94	80	74	M14x70x12
KB450-110	110	170	94	80	74	M14x70x14
KB450-120	120	180	94	80	74	M14x70x15
KB450-130	130	190	94	80	74	M14x70x15
KB450-140	140	200	94	80	74	M14x70x17
KB450-150	150	210	94	80	74	M14x70x18
KB450-160	160	230	110	94	88	M16x80x17
KB450-170	170	240	110	94	88	M16x80x18
KB450-180	180	250	110	94	88	M16x80x20
KB450-190	190	260	110	94	88	M16x80x21
KB450-200	200	270	110	94	88	M16x80x23
KB450-220	220	300	134	116	110	M18x100x21
KB450-240	240	320	134	116	110	M18x100x24
KB450-260	260	340	134	116	110	M18x100x26
KB450-280	280	370	156	136	130	M20x120x24
KB450-300	300	390	156	136	130	M20x120x24

KONİK KİLİTLER (KAMASIZ BURÇLAR)
Taper Lock Bushings (Keyless Bushings)

500 Kamasız Burçlar 500 Taper Lock Bushings

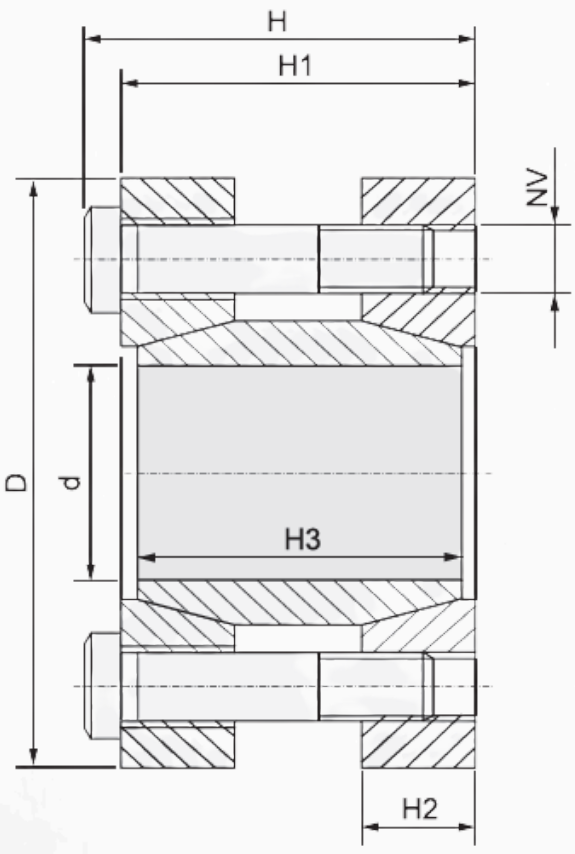



KB-500

Kod (Code)	d	D	H	H1	NV
KB500-17	17	50	56	50	M6x45x4
KB500-18	18	50	56	50	M6x45x4
KB500-19	19	50	56	50	M6x45x4
KB500-20	20	50	56	50	M6x45x4
KB500-22	22	55	66	60	M6x55x6
KB500-24	24	55	66	60	M6x55x6
KB500-25	25	55	66	60	M6x55x6
KB500-28	28	60	66	60	M6x55x6
KB500-30	30	60	66	60	M6x55x6
KB500-32	32	65	66	60	M6x55x6
KB500-35	35	75	83	75	M8x70x4
KB500-38	38	75	83	75	M8x70x4
KB500-40	40	75	83	75	M8x70x4
KB500-42	42	78	83	75	M8x70x4
KB500-45	45	85	93	85	M8x80x6
KB500-48	48	90	93	85	M8x80x6
KB500-50	50	90	93	85	M8x80x6
KB500-55	55	95	93	85	M8x80x8
KB500-60	60	100	93	85	M8x80x8
KB500-65	65	105	93	85	M8x80x8
KB500-70	70	115	110	100	M10x95x6
KB500-75	75	120	110	100	M10x95x6
KB500-80	80	125	110	100	M10x95x8
KB500-85	85	130	110	100	M10x95x8
KB500-90	90	135	110	100	M10x95x8

KONİK KİLİTLER (KAMASIZ BURÇLAR)
Taper Lock Bushings (Keyless Bushings)

501 Kamasız Burçlar 501 Taper Lock Bushings

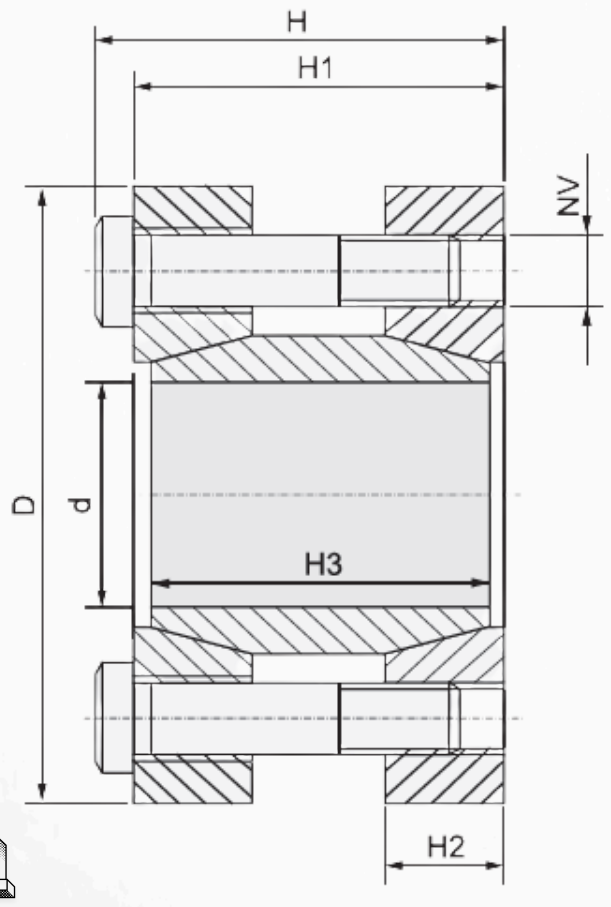



KB-501

Kod (code)	d	D	H	H1	NV	tip
KB501-22	22	60	44	40	M6x35x6	kb501
KB501-24	24	60	44	40	M6x35x6	kb501
KB501-25	25	66	48	44	M6x40x8	kb501
KB501-28	28	66	48	44	M6x40x8	kb501
KB501-29	29	66	48	44	M6x40x8	kb501
KB501-30	30	76	52	48	M6x45x8	kb501
KB501-32	32	76	52	48	M6x45x8	kb501
KB501-35	35	76	52	48	M6x45x8	kb501
KB501-36	36	96	62	56	M8x50x8	kb501
KB501-40	40	96	62	56	M8x50x8	kb501
KB501-44	44	96	62	56	M8x50x8	kb501
KB501-50	50	112	74	68	M8x60x10	kb501
KB501-51	51	112	74	68	M8x60x10	kb501
KB501-54	54	112	74	68	M8x60x10	kb501
KB501-55	55	120	84	78	M8x70x12	kb501
KB501-60	60	120	84	78	M8x70x12	kb501
KB501-63	63	120	84	78	M8x70x12	kb501

Kod (code)	d	D	H	H1	NV
KB501-65	65	148	95	88	M10x80x12
KB501-68	68	148	95	88	M10x80x12
KB501-70	70	148	95	88	M10x80x12
KB501-73	73	148	95	88	M10x80x12
KB501-74	74	170	112	104	M12x110x10
KB501-76	76	170	112	104	M12x110x10
KB501-80	80	170	112	104	M12x110x10
KB501-85	85	170	112	104	M12x110x10
KB501-86	86	185	124	116	M12x120x12
KB501-90	90	185	124	116	M12x120x12
KB501-92	92	185	124	116	M12x120x12
KB501-96	96	185	124	116	M12x120x12
KB501-100	100	197	134	126	M12x125x16
KB501-106	106	197	134	126	M12x125x16
KB501-108	108	197	134	126	M12x125x16
KB501-110	110	197	134	126	M12x125x16
KB501-120	120	230	162	152	M16x150x12
KB501-130	130	230	162	152	M16x150x12

KONİK KİLİTLER (KAMASIZ BURÇLAR)
Taper Lock Bushings (Keyless Bushings)

MLA Kamasız Burçlar MLA Taper Lock Bushings

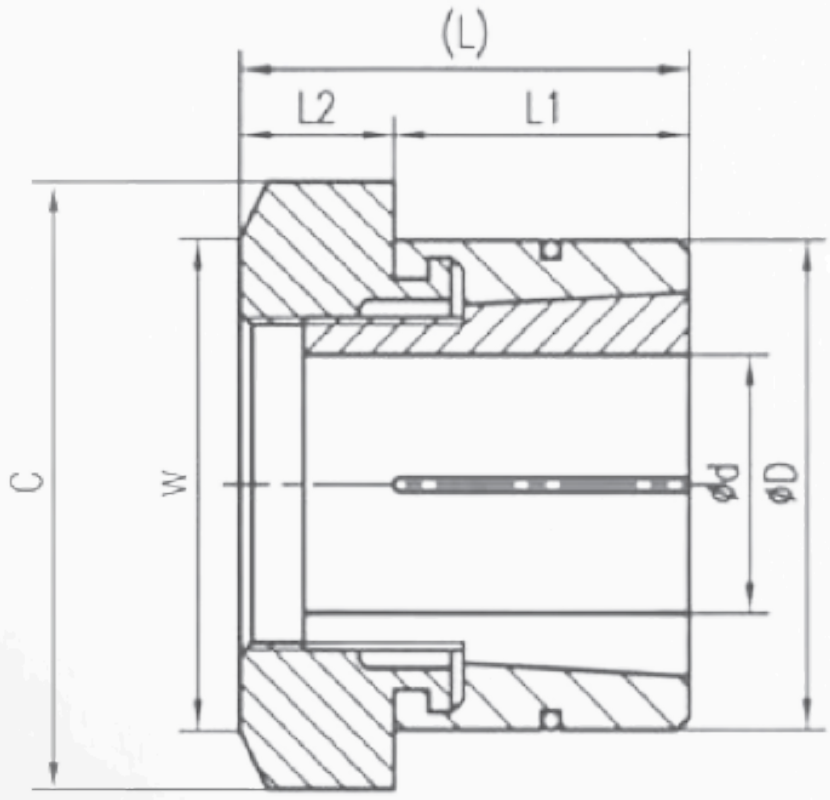



MLA

Kod (Code)	L	L1	L2	W	C	d	D
MLA5-16	15	10	5	17	19,6	5	16
MLA6-16	15	10	5	17	19,6	6	16
MLA7-21	21	14	7	22	25,4	7	21
MLA8-21	21	14	7	22	25,4	8	21
MLA9-21	21	14	7	22	25,4	9	21
MLA10-24	22	14	8	24	27,7	10	24
MLA11-24	22	14	8	24	27,7	11	24
MLA12-24	22	14	8	24	27,7	12	24
MLA14-31	27	17	10	32	37	14	31
MLA15-31	27	17	10	32	37	15	31
MLA16-31	27	17	10	32	37	16	31
MLA17-36	33	21	12	36	41,6	17	36
MLA18-36	33	21	12	36	41,6	18	36
MLA19-36	33	21	12	36	41,6	19	36
MLA20-41	35	23	12	41	47,3	20	41
MLA22-41	35	23	12	41	47,3	22	41
MLA24-41	35	23	12	41	47,3	24	41
MLA25-46	37	25	12	46	53,1	25	46
MLA28-46	37	25	12	46	53,1	28	46
MLA30-50	41	28	13	50	57,7	30	50
MLA32-50	41	28	13	50	57,7	32	50

KONİK KİLİTLER (KAMASIZ BURÇLAR)
Taper Lock Bushings (Keyless Bushings)

MLB Kamasız Burçlar — MLB Taper Lock Bushings



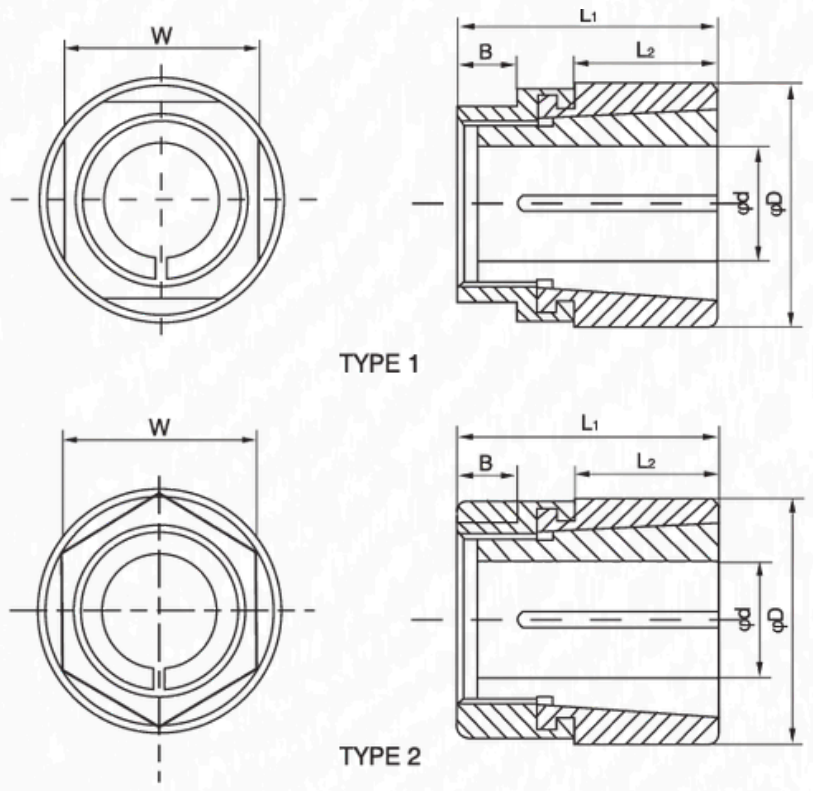

Kod (Code)	d	D	tip	L1	L2	W	B
MLB5-16	5	16	mlb1	19	9,5	13	3
MLB6-16	6	16	mlb1	19	9,5	13	3
MLB8-19	8	19	mlb1	22	11	16	3
MLB9-19	9	19	mlb1	22	11	16	3
MLB10-22,5	10	22,5	mlb1	25,5	12,5	19	5
MLB11-22,5	11	22,5	mlb1	25,5	12,5	19	5
MLB12-22,5	12	22,5	mlb1	25,5	12,5	19	5
MLB14-25,5	14	25,5	mlb1	28,5	16	22	5
MLB15-25,5	15	25,5	mlb1	28,5	16	22	5
MLB16-25,5	16	25,5	mlb1	28,5	16	22	5
MLB15-38	15	38	mlb2	38	19	32	8
MLB18-38	18	38	mlb2	38	19	32	8
MLB20-38	20	38	mlb2	38	19	32	8
MLB22-45	22	45	mlb2	47,5	21,5	38	11
MLB24-45	24	45	mlb2	47,5	21,5	38	11
MLB25-45	25	45	mlb2	47,5	21,5	38	11
MLB28-51	28	51	mlb2	57	25,5	46	13
MLB30-51	30	51	mlb2	57	25,5	46	13
MLB32-51	32	51	mlb2	57	25,5	46	13
MLB34-60,5	34	60,5	mlb2	70	38	50	14
MLB35-60,5	35	60,5	mlb2	70	38	50	14
MLB38-60,5	38	60,5	mlb2	70	38	50	14
MLB40-67	40	67	mlb2	79,5	43	60	14,5
MLB42-67	42	67	mlb2	79,5	43	60	14,5
MLB45-73	45	73	mlb2	980,5	51	65	16
MLB48-73	48	73	mlb2	980,5	51	65	16
MLB50-73	50	73	mlb2	980,5	51	65	16
MLB55-80	55	80	mlb2	95	54	70	16
MLB60-86	60	86	mlb2	98,5	57	75	17,5
MLB65-92	65	92	mlb2	103	60,5	80	17,5
MLB70-92	70	92	mlb2	103	60,5	80	17,5
MLB75-100	75	100	mlb2	108	63,5	90	19

ardmak

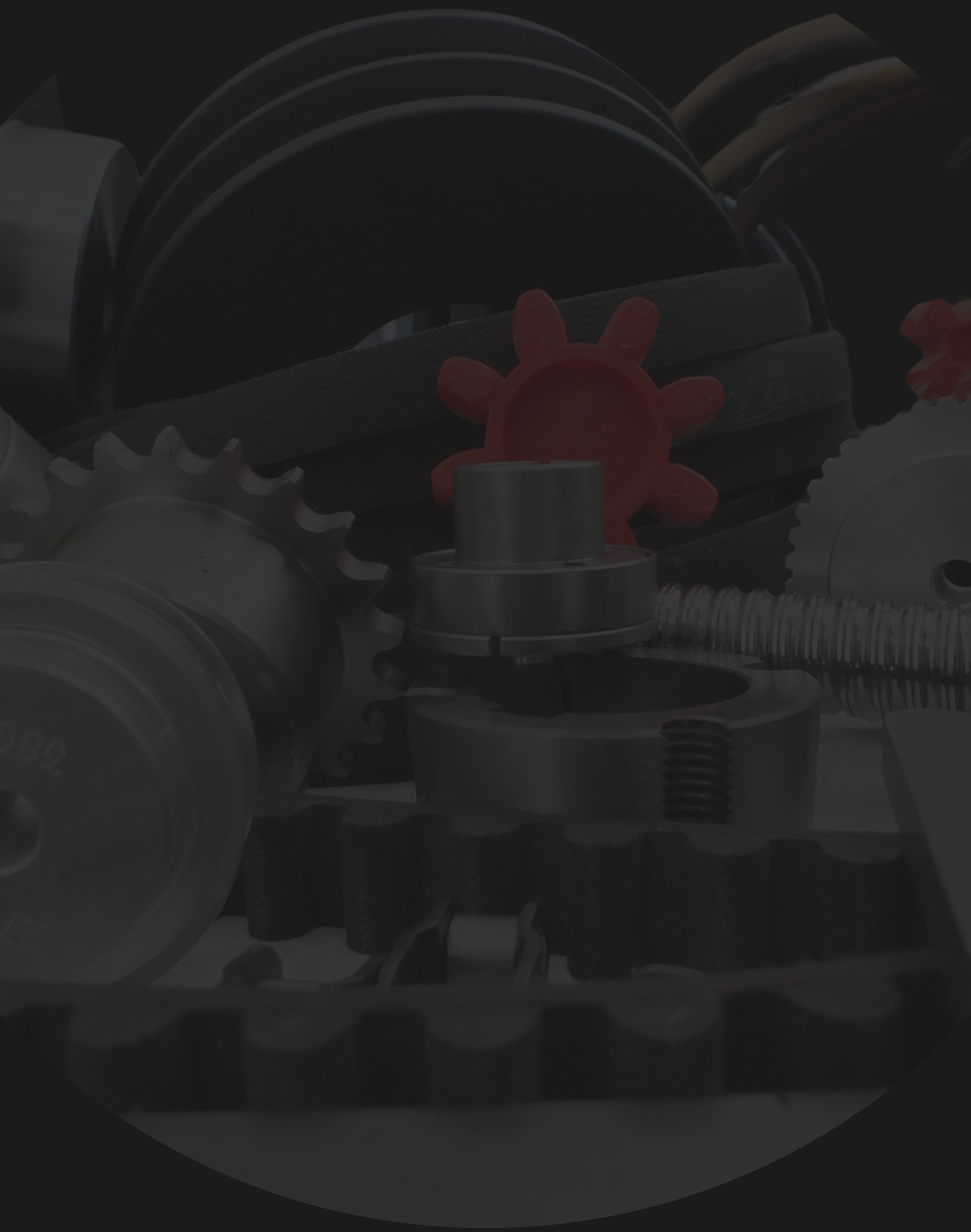

www.ardmakina.com
ard@ardmakina.com
0332 248 64 60