ardmak

17

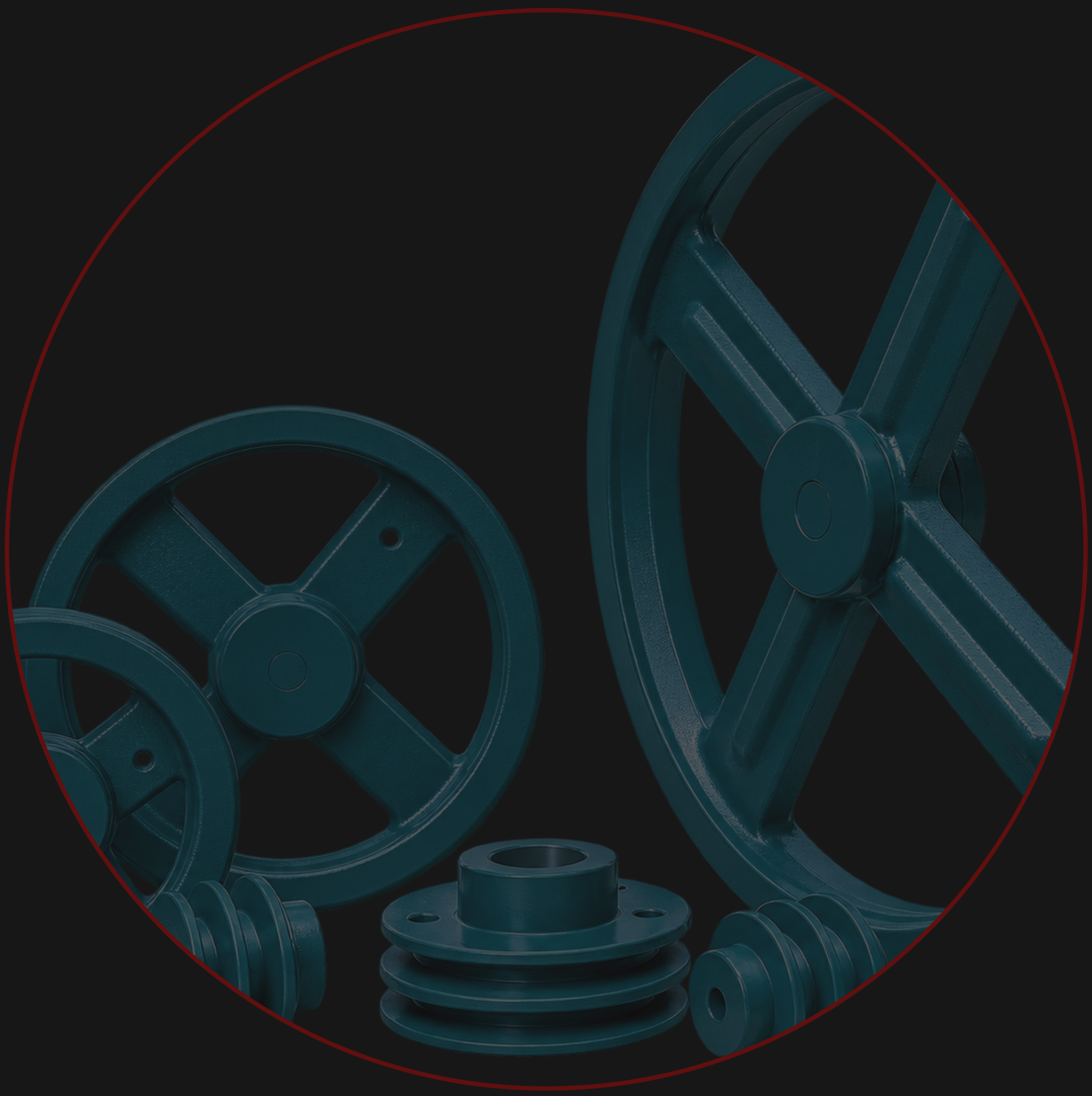

Dolu V Kasnaklar

Solid V pulley

TEKNİK ÇİZİMLER

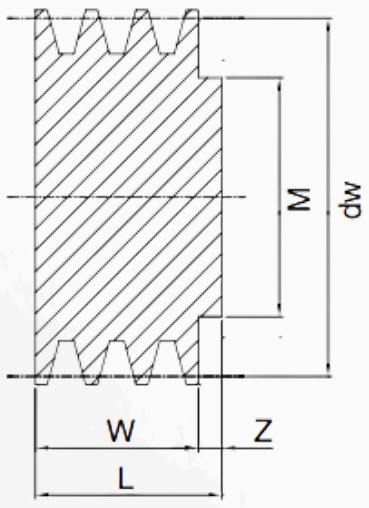

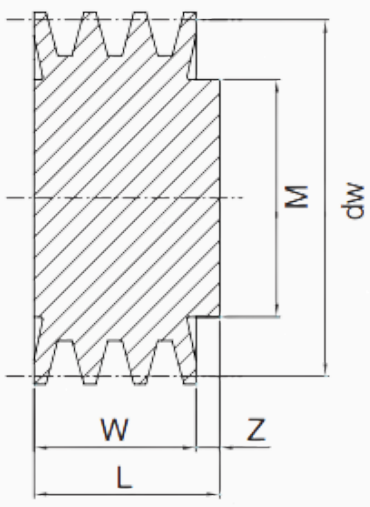

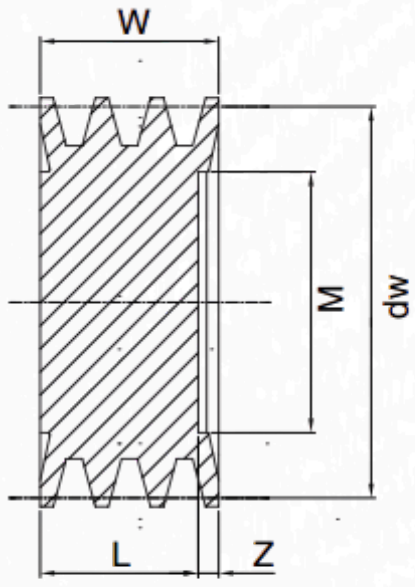

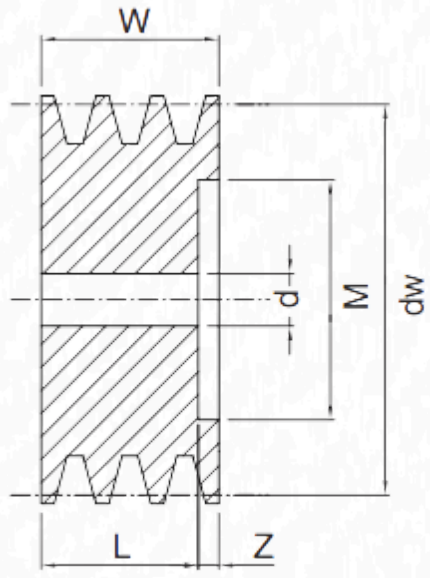

D1K

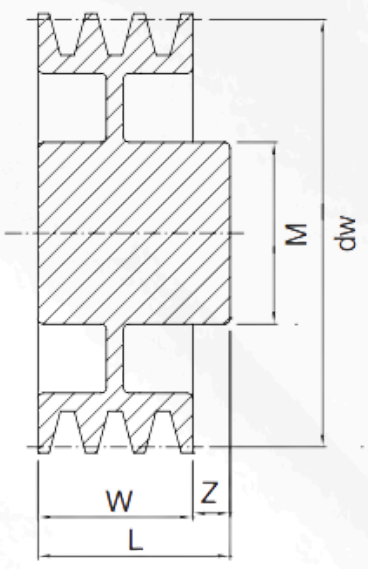

D1AK

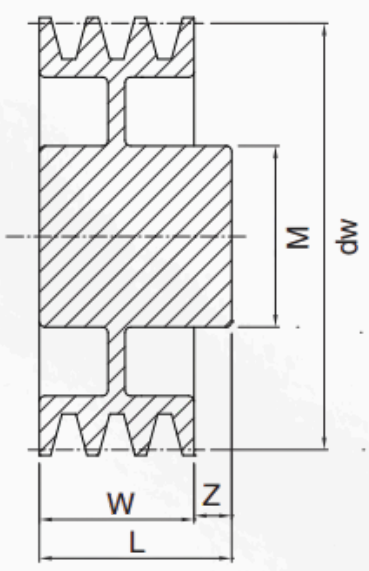

D2AK

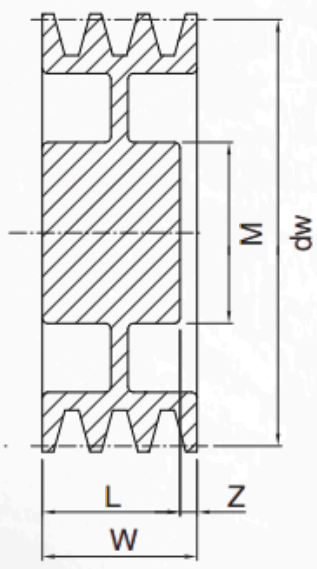

D3K

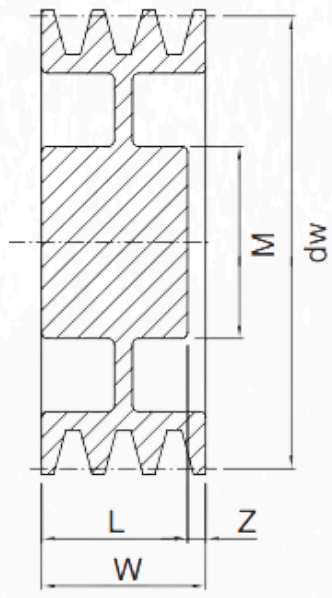

D4K

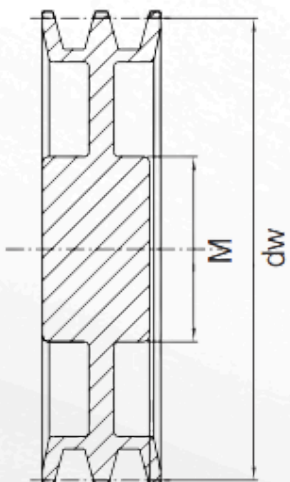

D4AK

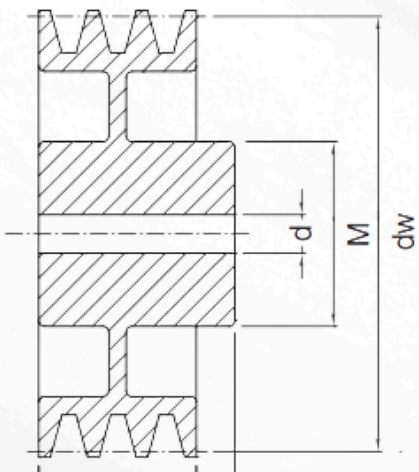

D5AK

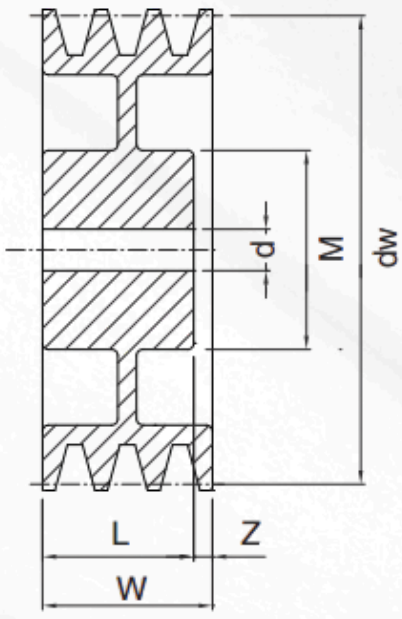

D5K

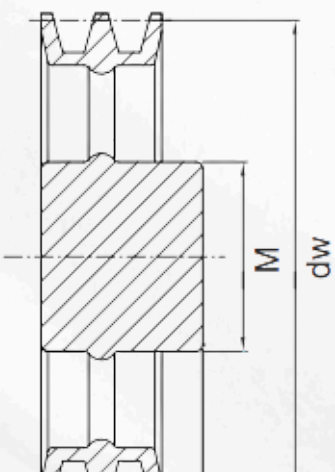

D5BK

D6K

D7K

D8BK

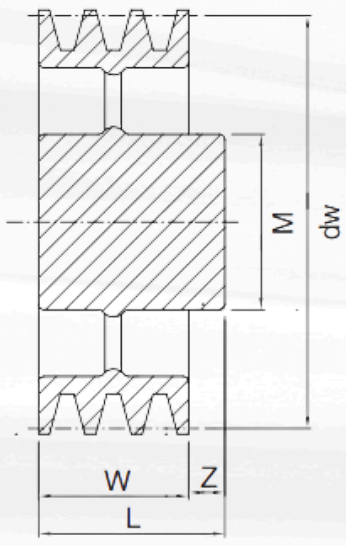

D8AK- 8

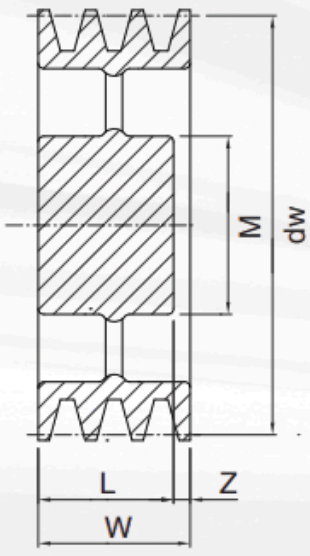

D9AK-9

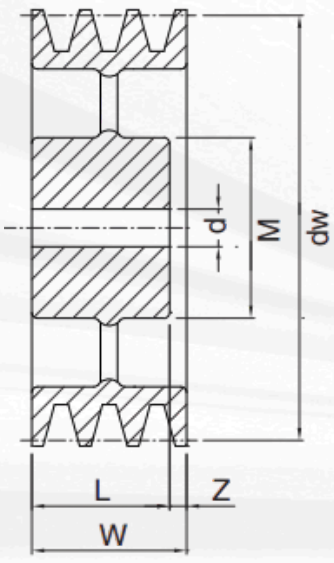

D11K

ardmak

DOLU V KASNAKLAR
Solid V pulleys

17 Dolu V Kasnaklar 17 Solid V pulleys

17

Kod (Code)	Dw	Kanal (Grooves)	Tip (Type)	M	L	W	Z
17-60-1-P	60	1	D1K	40	35*	25	10
17-60-2-P	60	2	D1K	40	48*	44	4
17-71-1-P	71	1	D1K	45	35**	25	10
17-71-2-P	71	2	D1K	45	48**	44	4
17-71-3-P	71	3	D1K	45	67**	63	4
17-75-1-P	75	1	D1K	45	35	25	10
17-75-2-P	75	2	D1K	45	48	44	4
17-75-3-P	75	3	D1K	45	67	63	4
17-80-1-P	80	1	D1K	50	35	25	10
17-80-2-P	80	2	D1K	50	48	44	4
17-80-3-P	80	3	D1K	50	67	63	4
17-80-4-P	80	4	D1K	52	86	82	4
17-80-5-P	80	5	D1K	58	105	101	4
17-85-1-P	85	1	D1K	50	35	25	10
17-85-2-P	85	2	D1K	50	48	44	4
17-85-3-P	85	3	D1K	52	67	63	4
17-85-4-P	85	4	D1K	58	86	82	4
17-85-5-P	85	5	D1K	58	105	101	4
17-90-1-P	90	1	D1K	50	35	25	10
17-90-2-P	90	2	D1K	50	48	44	4
17-90-3-P	90	3	D1K	58	67	63	4
17-90-4-P	90	4	D2AK	65	50	82	32
17-90-5-P	90	5	D2AK	65	50	101	51
17-95-1-P	95	1	D1K	52	35	25	10
17-95-2-P	95	2	D1K	55	48	44	4
17-95-3-P	95	3	D1K	58	67	63	4
17-95-4-P	95	4	D2AK	65	50	82	32
17-95-5-P	95	5	D2AK	65	50	101	51
17-100-1-P	100	1	D1K	52	35	25	10
17-100-2-P	100	2	D1K	55	48	44	4
17-100-3-P	100	3	D1K	58	67	63	4
17-100-4-P	100	4	D2AK	65	50	82	32
17-100-5-P	100	5	D2AK	65	50	101	51
17-106-1-P	106	1	D4K	50	35	25	10
17-106-2-P	106	2	D4K	55	48	44	4
17-106-3-P	106	3	D2AK	65	50	63	13
17-106-4-P	106	4	D2AK	65	50	82	32
17-106-5-P	106	5	D2AK	67	50	101	51

ardmak

DOLU V KASNAKLAR
Solid V pulleys

17 Dolu V Kasnaklar — 17 Solid V pulleys

17

Kod (Code)	Dw	Kanal (Grooves)	Tip (Type)	M	L	W	Z
17-112-1-P	112	1	D4K	55	35	25	10
17-112-2-P	112	2	D4K	60	48	44	4
17-112-3-P	112	3	D2AK	65	50	63	13
17-112-4-P	112	4	D2AK	75	50	82	32
17-112-5-P	112	5	D2AK	75	50	101	51
17-118-1-P	118	1	D4K	55	35	25	10
17-118-2-P	118	2	D4K	60	48	44	4
17-118-3-P	118	3	D2AK	75	50	63	13
17-118-4-P	118	4	D2AK	75	50	82	32
17-118-5-P	118	5	D2AK	75	50	101	51
17-125-1-P	125	1	D4K	55	35	25	10
17-125-2-P	125	2	D4K	60	48	44	4
17-125-3-P	125	3	D2AK	75	50	63	13
17-125-4-P	125	4	D5K	75	50	82	32
17-125-5-P	125	5	D5BK	75	50	101	51
17-125-6-P	125	6	D2AK	80	60	120	60
17-132-1-P	132	1	D4K	60	35	25	10
17-132-2-P	132	2	D4K	60	50	44	6
17-132-3-P	132	3	D5K	75	50	63	13
17-132-4-P	132	4	D5K	80	50	82	32
17-132-5-P	132	5	D5K	80	60	101	41
17-132-6-P	132	6	D5K	80	60	120	60
17-140-1-P	140	1	D4K	60	35	25	10
17-140-2-P	140	2	D4K	65	50	44	6
17-140-3-P	140	3	D5K	75	50	63	13
17-140-4-P	140	4	D5K	80	50	82	32
17-140-5-P	140	5	D5K	80	60	101	41
17-140-6-P	140	6	D5K	80	60	120	60
17-150-1-P	150	1	D4K	60	40	25	15
17-150-2-P	150	2	D4K	65	50	44	6
17-150-3-P	150	3	D5K	75	50	63	13
17-150-4-P	150	4	D5K	80	50	82	32
17-150-5-P	150	5	D5K	80	60	101	41
17-150-6-P	150	6	D5K	88	60	120	60
17-160-1-P	160	1	D4K	65	40	25	15
17-160-2-P	160	2	D4K	68	50	44	6
17-160-3-P	160	3	D5K	80	50	63	13
17-160-4-P	160	4	D5K	88	60	82	22
17-160-5-P	160	5	D5K	88	60	101	41
17-160-6-P	160	6	D5K	88	65	120	55

ardmak

DOLU V KASNAKLAR
Solid V pulleys

17 Dolu V Kasnaklar 17 Solid V pulleys

17

Kod (Code)	Dw	Kanal (Grooves)	Tip (Type)	M	L	W	Z
17-170-1-P	170	1	D4K	65	40	25	15
17-170-2-P	170	2	D4K	68	50	44	6
17-170-3-P	170	3	D5K	80	50	63	13
17-170-4-P	170	4	D5K	88	60	82	22
17-170-5-P	170	5	D5K	88	60	101	41
17-170-6-P	170	6	D5K	104	65	120	55
17-180-1-P	180	1	D4K	65	40	25	15
17-180-2-P	180	2	D4K	68	50	44	6
17-180-3-P	180	3	D5K	80	50	63	13
17-180-4-P	180	4	D5K	88	60	82	22
17-180-5-P	180	5	D5K	88	70	101	31
17-180-6-P	180	6	D5K	104	70	120	50
17-190-1-P	190	1	D4K	65	40	25	15
17-190-2-P	190	2	D4K	68	50	44	6
17-190-3-P	190	3	D5K	80	50	63	13
17-190-4-P	190	4	D5K	88	60	82	22
17-190-5-P	190	5	D5K	88	70	101	31
17-190-6-P	190	6	D5K	104	70	120	50
17-200-1-P	200	1	D4K	68	40	25	15
17-200-2-P	200	2	D4K	68	50	44	6
17-200-3-P	200	3	D5K	80	50	63	13
17-200-4-P	200	4	D5K	88	60	82	22
17-200-5-P	200	5	D5K	88	70	101	31
17-200-6-P	200	6	D5K	104	80	120	40
17-212-1-P	212	1	D4K	68	45	25	20
17-212-2-P	212	2	D4K	68	50	44	6
17-212-3-P	212	3	D5K	80	50	63	13
17-212-4-P	212	4	D5K	88	60	82	22
17-212-5-P	212	5	D5K	88	70	101	31
17-212-6-P	212	6	D5K	104	80	120	40
17-224-1-P	224	1	D4K	68	45	25	20
17-224-2-P	224	2	D4K	75	50	44	6
17-224-3-P	224	3	D5K	80	50	63	13
17-224-4-P	224	4	D5K	88	60	82	22
17-224-5-P	224	5	D5K	96	70	101	31
17-224-6-P	224	6	D5K	104	80	120	40
17-236-1-P	236	1	D4K	68	45	25	20
17-236-2-P	236	2	D4K	75	50	44	6
17-236-3-P	236	3	D5K	80	60	63	3
17-236-4-P	236	4	D5K	88	65	82	17
17-236-5-P	236	5	D5K	96	75	101	26
17-236-6-P	236	6	D5K	104	80	120	40

ardmak

DOLU V KASNAKLAR
Solid V pulleys

17 Dolu V Kasnaklar 17 Solid V pulleys

17

Kod (Code)	Dw	Kanal (Grooves)	Tip (Type)	M	L	W	Z
17-250-1-P	250	1	D8K	70	45	25	20
17-250-2-P	250	2	D8K	75	50	44	6
17-250-3-P	250	3	D9K	88	60	63	3
17-250-4-P	250	4	D9K	96	65	82	17
17-250-5-P	250	5	D4AK	104	75	101	26
17-250-6-P	250	6	D4AK	104	80	120	40
17-280-1-P	280	1	D8K	75	45	25	20
17-280-2-P	280	2	D8K	75	50	44	6
17-280-3-P	280	3	D9K	88	60	63	3
17-280-4-P	280	4	D9K	96	65	82	17
17-280-5-P	280	5	D9K	104	75	101	26
17-280-6-P	280	6	D9K	104	80	120	40
17-300-1-P	300	1	D8K	75	50	25	25
17-300-2-P	300	2	D8K	80	50	44	6
17-300-3-P	300	3	D9K	88	60	63	3
17-300-4-P	300	4	D9K	96	65	82	17
17-300-5-P	300	5	D9K	104	75	101	26
17-300-6-P	300	6	D9K	104	80	120	40
17-315-2-P	315	2	D8K	88	60	44	16
17-315-3-P	315	3	D9K	88	60	63	3
17-315-4-P	315	4	D9K	96	65	82	17
17-315-5-P	315	5	D9K	104	75	101	26
17-315-6-P	315	6	D9K	120	90	120	30
17-355-1-P	355	1	D8AK	80	50	25	25
17-355-2-P	355	2	D8K	88	60	44	16
17-355-3-P	355	3	D9K	96	60	63	3
17-355-4-P	355	4	D9K	96	65	82	17
17-355-5-P	355	5	D9K	104	75	101	26
17-355-6-P	355	6	D9K	120	90	120	30
17-400-2-P	400	2	D8AK	88	60	44	16
17-400-3-P	400	3	D8AK	96	65	63	2
17-400-4-P	400	4	D9AK	104	75	82	7
17-400-5-P	400	5	D9AK	112	85	101	16
17-400-6-P	400	6	D9AK	120	100	120	20

DOLU V KASNAKLAR
Solid V pulleys

17 Dolu V Kasnaklar 17 Solid V pulleys

17

Kod (Code)	Dw	Kanal (Grooves)	Tip (Type)	M	L	W	Z
17-450-2-P	450	2	D8AK	88	60	44	16
17-450-3-P	450	3	D8AK	96	65	63	2
17-450-4-P	450	4	D9AK	104	75	82	7
17-450-5-P	450	5	D9AK	112	85	101	16
17-450-6-P	450	6	D9AK	120	100	120	20
17-500-2-P	500	2	D8AK	96	65	44	21
17-500-3-P	500	3	D8AK	104	75	63	12
17-500-4-P	500	4	D8AK	112	85	82	3
17-500-5-P	500	5	D9AK	120	90	101	11
17-500-6-P	500	6	D9AK	128	105	120	15
17-560-2-P	560	2	D8AK	96	65	44	21
17-560-3-P	560	3	D8AK	104	75	63	12
17-560-4-P	560	4	D8AK	112	85	82	3
17-560-5-P	560	5	D9AK	120	90	101	11
17-560-6-P	560	6	D9AK	128	105	120	15
17-630-2-P	630	2	D8AK	104	65	44	21
17-630-3-P	630	3	D8AK	120	75	63	12
17-630-4-P	630	4	D8AK	128	105	82	23
17-630-5-P	630	5	D8AK	145	115	101	14
17-630-6-P	630	6	D9AK	145	115	120	5
17-710-2-P	710	2	D8AK	96	65	44	21
17-710-3-P	710	3	D8AK	112	75	63	12
17-710-4-P	710	4	D8AK	120	90	82	8
17-710-5-P	710	5	D8AK	128	105	101	4
17-710-6-P	710	6	D9AK	145	115	120	5
17-800-2-P	800	2	D8AK	104	70	44	26
17-800-3-P	800	3	D8AK	120	90	63	27
17-800-4-P	800	4	D8AK	128	105	82	23
17-800-5-P	800	5	D8AK	145	115	101	14
17-800-6-P	800	6	D9AK	145	115	120	5



ardmak

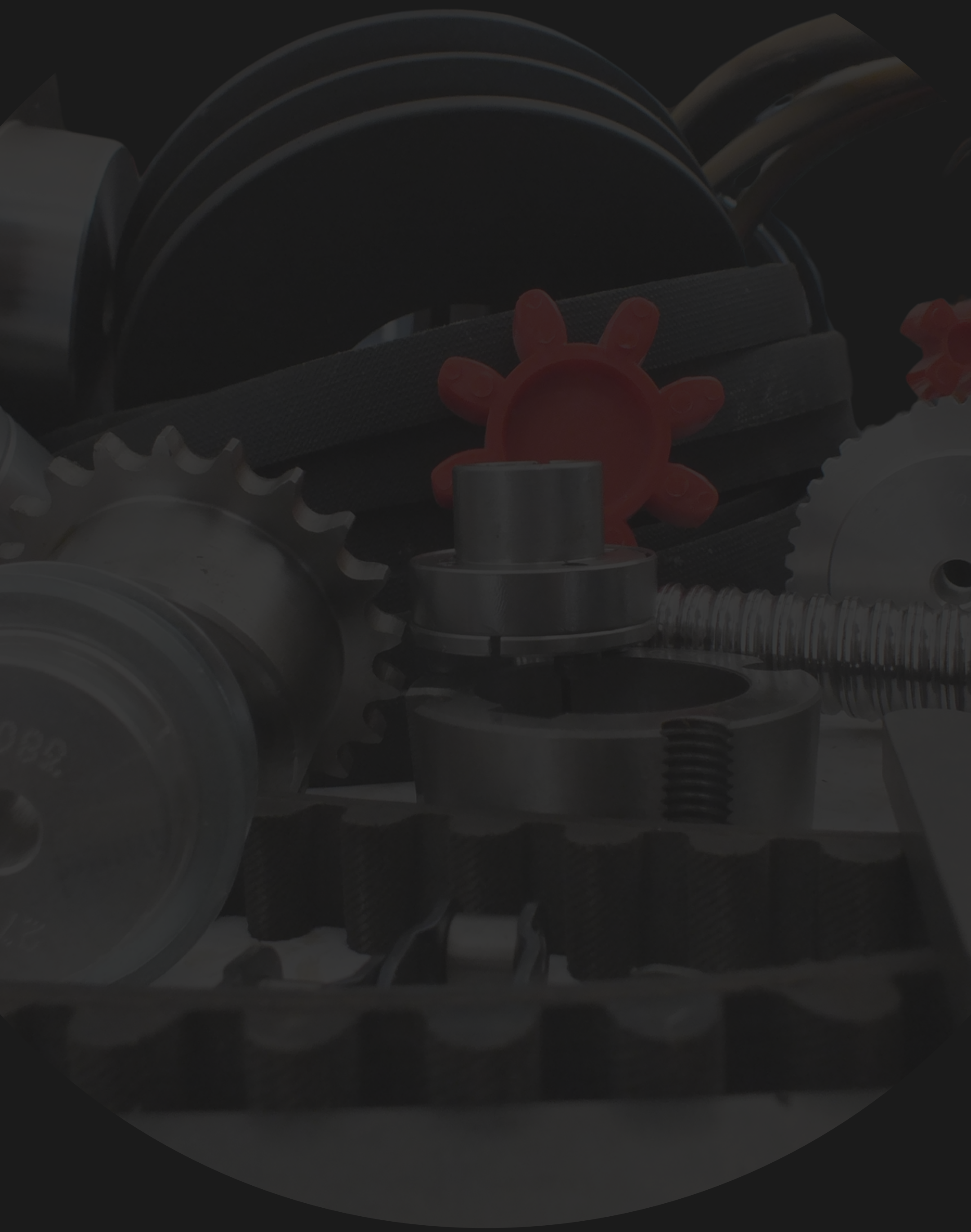

www.ardmakina.com
ard@ardmakina.com
0332 248 64 60