ardmak

8M



Burçlu Triger Dişliler

Bushed Timing Belt Pulleys

www.ardmakina.com

BURÇLU TRİGER DİŞLİLER
Bushed Timing Belt Pulleys

HTD 8M HATVELİ TRİGER DİŞLİLER HTD 8M Timing Belt Pulleys

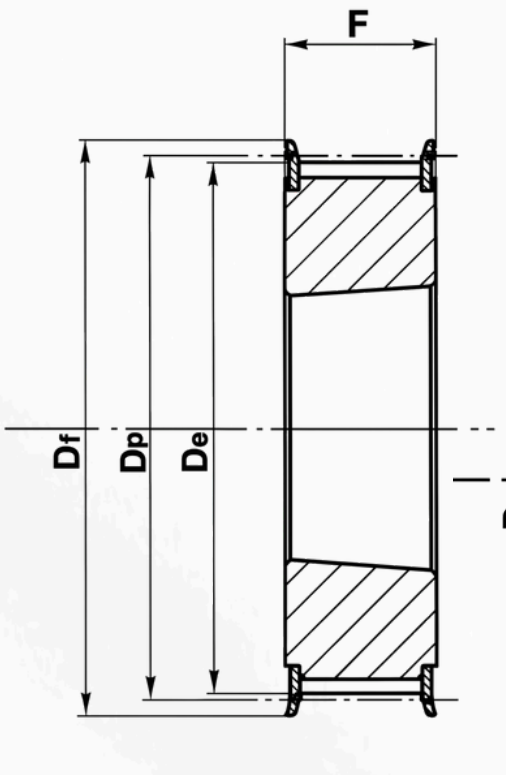

3F

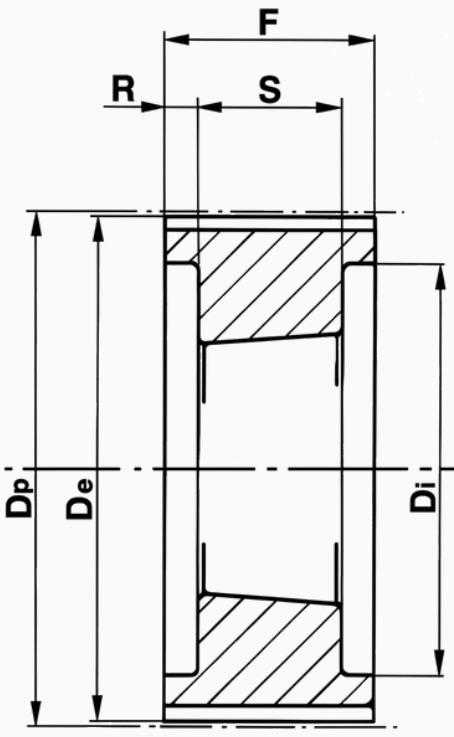

4

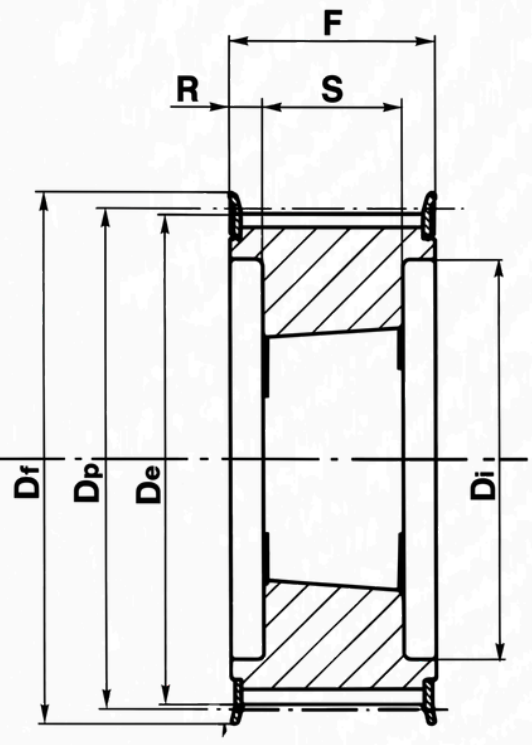

4F

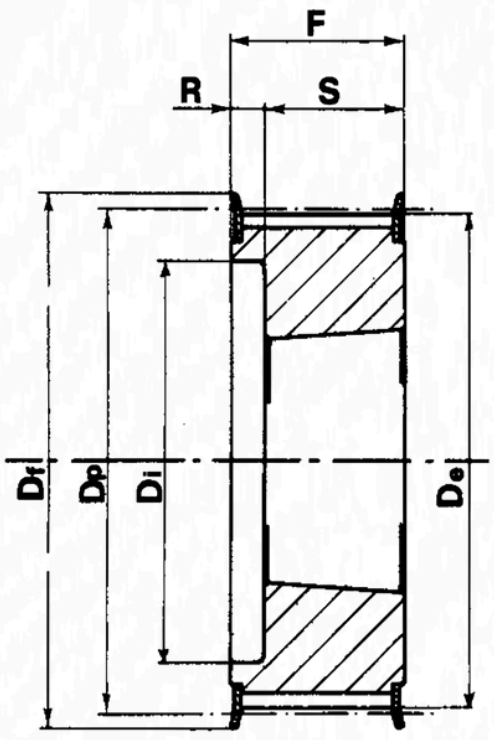

5F

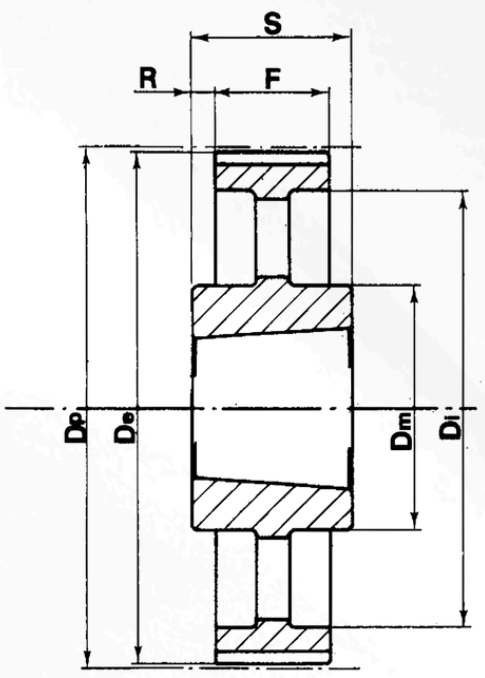

7A

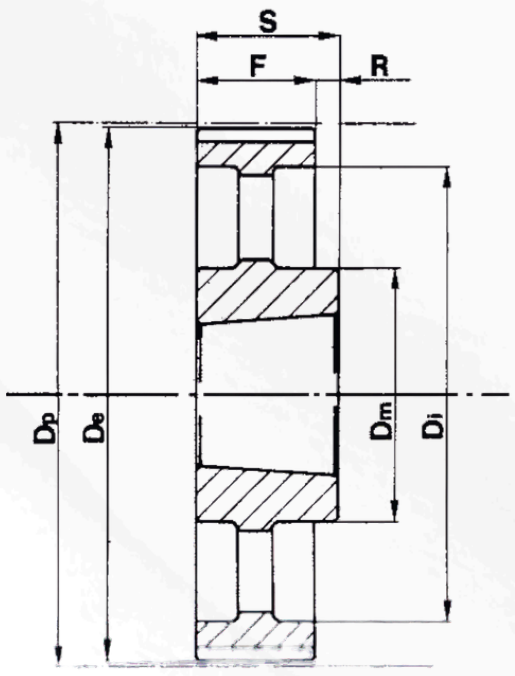

8A

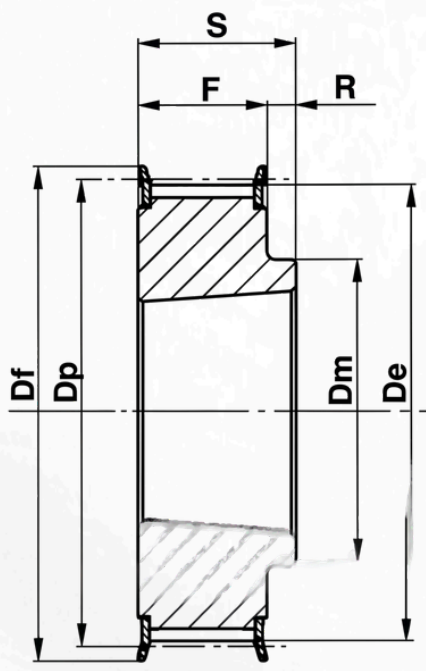

8F

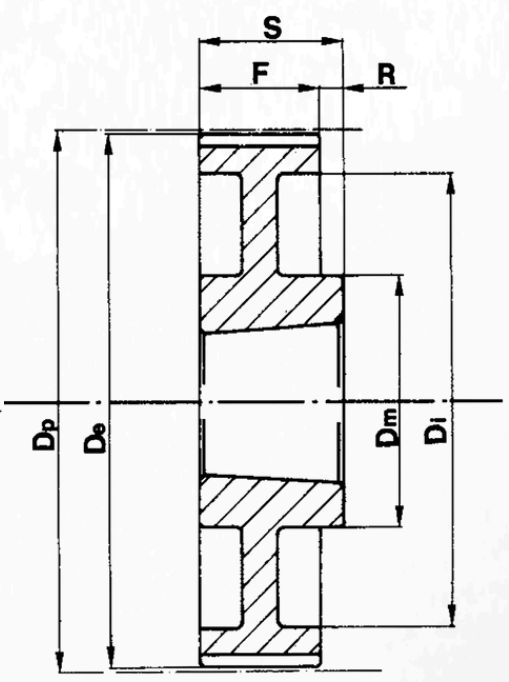

8W

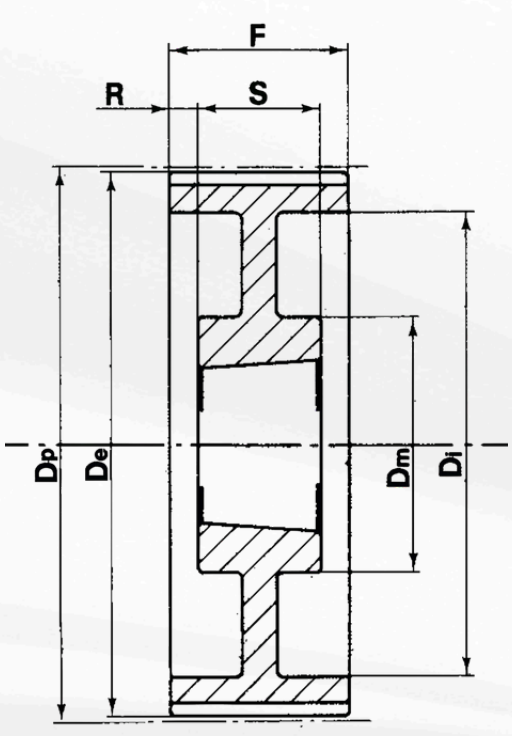

9W

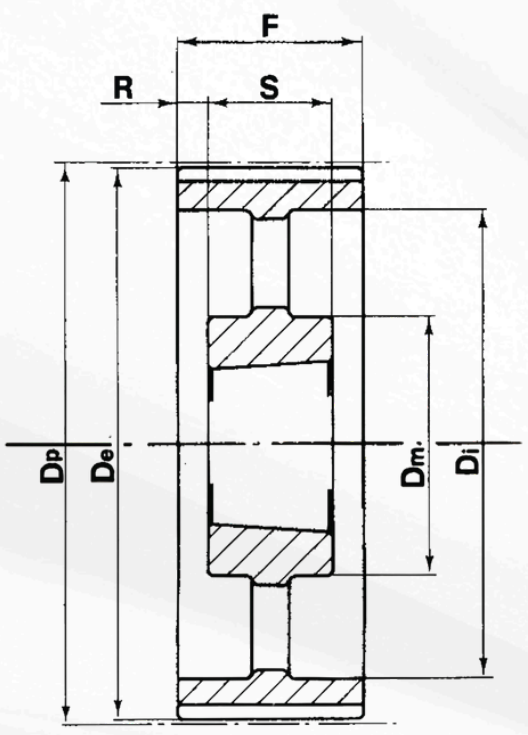

9A

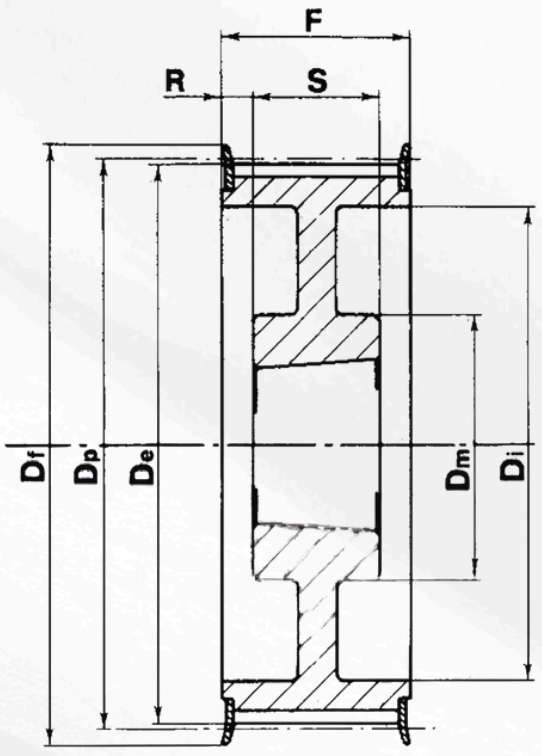

9WF



GÜÇ DEVİR TABLOSU

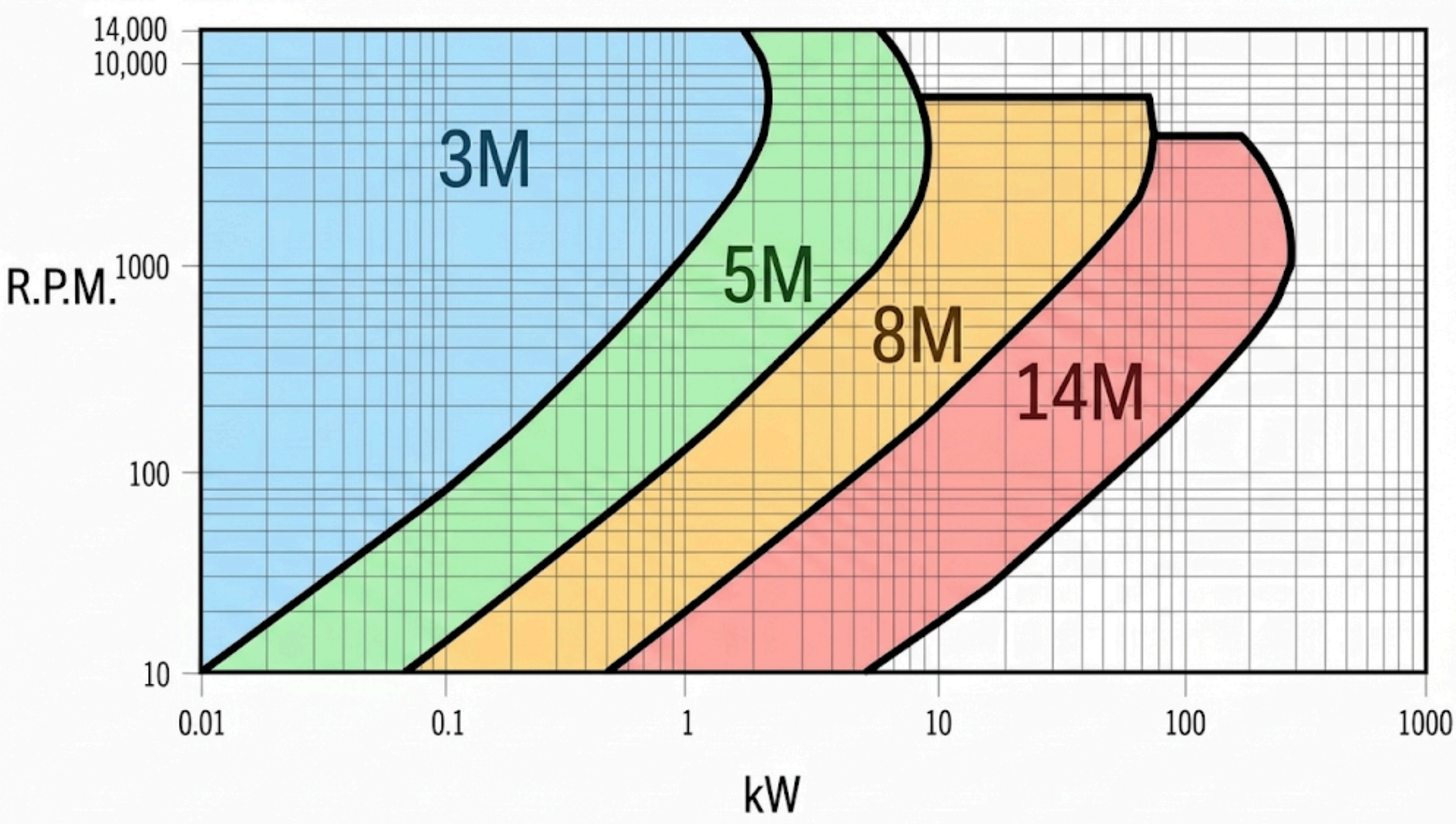

8M-20

Kod (Code)	Tip (Type)	Flanş (Flange)	Burç (bush)	Max. Delik (Bore)	Dp	De	Df	Dm	Di	F	S	R
22-8M-20	5F	F22	1108	25	56,02	54,65	60	—	37	28	22	6
24-8M-20	5F	F25	1108	25	61,12	59,75	66	—	44	28	22	6
26-8M-20	5F	F26	1108	25	66,21	64,84	70	—	45	28	22	6
28-8M-20	5F	F27	1108	25	71,3	70,08	75	—	50	28	22	6
30-8M-20	5F	F29	1108	25	76,39	75,13	83	—	58	28	22	6
32-8M-20	5F	F30	1610	42	81,49	80,16	87	—	63	28	25	3
34-8M-20	5F	F31	1610	42	86,58	85,22	91	—	64	28	25	3
36-8M-20	5F	F33	1610	42	91,67	90,3	97	—	68	28	25	3
38-8M-20	5F	F34	1610	42	96,77	95,39	102	—	72	28	25	3
40-8M-20	5F	F35	1610	42	101,86	100,49	106	—	76	28	25	3
44-8M-20	8F	F38	2012	50	112,05	110,67	120	93	—	28	32	4
48-8M-20	8F	F40	2012	50	122,23	120,86	128	96	—	28	32	4
56-8M-20	8F	F48	2012	50	142,6	141,23	150	110	—	28	32	4
64-8M-20	9WF	F52	2012	50	162,97	161,6	168	110	137	28	32	4
72-8M-20	9WF	F57	2012	50	183,35	181,97	192	110	158	28	32	4
80-8M-20	8W	—	2012	50	203,72	202,35	—	110	180	28	32	4
90-8M-20	8A	—	2012	50	229,18	227,81	—	110	204	28	32	4
144-8M-20	8A	—	2517	60	366,69	365,32	—	125	336	28	32	4

ardmak

BURÇLU TRİGER DİŞLİLER
Bushed Timing Belt Pulleys

HTD 8M HATVELİ TRİGER DİŞLİLER HTD 8M Timing Belt Pulleys

8M-30

Kod (Code)	Tip (Type)	Flanş (Flange)	Burç (bush)	Max. Delik (Bore)	Dp	De	Df	Dm	Di	F	S	R
22-8M-30	5F	F22	1108	25	56,02	54,65	60	—	37	38	22	16
24-8M-30	5F	F25	1108	25	61,12	59,75	66	—	44	38	22	16
26-8M-30	5F	F26	1108	25	66,21	64,84	70	—	44	38	22	16
28-8M-30	5F	F27	1210	32	71,3	70,08	75	—	50	38	25	13
30-8M-30	3F	F29	1615	42	76,39	75,13	83	—	—	38	38	—
32-8M-30	3F	F30	1615	42	81,49	80,16	87	—	—	38	38	—
34-8M-30	3F	F31	1615	42	86,58	85,22	91	—	—	38	38	—
36-8M-30	3F	F33	1615	42	91,67	90,3	97	—	—	38	38	—
38-8M-30	3F	F34	1615	42	96,77	95,39	102	—	—	38	38	—
40-8M-30	3F	F35	1615	42	101,86	100,49	106	—	—	38	38	—
44-8M-30	4F	F38	2012	50	112,05	110,67	120	—	86	38	32	3
48-8M-30	4F	F40	2012	50	122,23	120,86	128	—	90	38	32	3
56-8M-30	4F	F48	2012	50	142,6	141,23	150	—	110	38	32	3
64-8M-30	8F	F52	2517	60	162,97	161,6	168	125	—	38	45	7
72-8M-30	9WF	F57	2517	60	183,35	181,97	192	125	158	38	45	7
80-8M-30	8W	—	2517	60	203,72	202,35	—	125	180	38	45	7
90-8M-30	8A	—	2517	60	229,18	227,81	—	125	204	38	45	7
112-8M-30	8A	—	2517	60	285,21	283,83	—	125	254	38	45	7
144-8M-30	8A	—	2517	60	366,69	365,32	—	125	336	38	45	7

8M-50

Kod (Code)	Tip (Type)	Flanş (Flange)	Burç (bush)	Max. Delik (Bore)	Dp	De	Df	Dm	Di	F	S	R
28-8M-50	4F	F27	1210	32	71,3	70,08	75	—	50	60	25	17,5
30-8M-50	5F	F29	1615	42	76,39	75,13	83	—	58	60	38	22
32-8M-50	5F	F30	1615	42	81,49	80,16	87	—	62	60	38	22
34-8M-50	5F	F31	1615	42	86,58	85,22	91	—	65	60	38	22
36-8M-50	5F	F33	1615	42	91,67	90,3	97	—	68	60	38	22
38-8M-50	5F	F34	1615	42	96,77	95,39	102	—	72	60	38	22
40-8M-50	4F	F35	2012	50	101,86	100,49	106	—	82	60	32	14
44-8M-50	4F	F38	2012	50	112,05	110,67	120	—	91	60	32	14
48-8M-50	4F	F40	2012	50	122,23	120,86	128	—	95	60	32	14
56-8M-50	4F	F48	2517	60	142,6	141,23	150	—	116	60	45	7,5
64-8M-50	4F	F52	2517	60	162,97	161,6	168	—	137	60	45	7,5
72-8M-50	9WF	F57	2517	60	183,35	181,97	192	125	158	60	45	7,5
80-8M-50	4	—	3020	75	203,72	202,35	—	—	180	60	51	4,5
90-8M-50	9W	—	3020	75	229,18	227,81	—	170	204	60	51	4,5
112-8M-50	9W	—	3020	75	285,21	283,83	—	170	260	60	51	4,5
144-8M-50	9A	—	3020	75	366,69	365,32	—	170	341	60	51	4,5
168-8M-50	7A	—	3525	90	427,81	426,44	—	198	402	60	65	2,5
192-8M-50	7A	—	3525	90	488,92	487,55	—	198	460	60	65	2,5

BURÇLU TRİGER DİŞLİLER
Bushed Timing Belt Pulleys

HTD 8M HATVELİ TRİGER DİŞLİLER HTD 8M Timing Belt Pulleys

8M-85

Kod (Code)	Tip (Type)	Flanş (Flange)	Burç (bush)	Max. Delik (Bore)	Dp	De	Df	Dm	Di	F	S	R
34-8M-85	4F	F31	1615	42	86,58	85,22	91	—	65	95	38	28,5
36-8M-85	4F	F33	1615	42	91,67	90,3	97	—	68	95	38	28,5
38-8M-85	4F	F34	1615	42	96,77	95,39	102	—	72	95	38	28,5
40-8M-85	4F	F35	2012	50	101,86	100,49	106	—	82	95	32	31,5
44-8M-85	4F	F38	2012	50	112,05	110,67	120	—	91	95	32	31,5
48-8M-85	4F	F40	2517	60	122,23	120,86	128	—	100	95	45	25
56-8M-85	4F	F48	2517	60	142,6	141,23	150	—	117	95	45	25
64-8M-85	4F	F52	2517	60	162,97	161,6	168	—	137	95	45	25
72-8M-85	4F	F57	3020	75	183,35	181,97	192	—	158	95	51	22
80-8M-85	4	—	3020	75	203,72	202,35	—	—	180	95	51	22
90-8M-85	9W	—	3020	75	229,18	227,81	—	170	204	95	51	22
112-8M-85	9W	—	3020	75	285,21	283,83	—	170	260	95	51	22
144-8M-85	9A	—	3525	90	366,69	365,32	—	198	336	95	65	15
168-8M-85	9A	—	3525	90	427,81	426,44	—	198	395	95	65	15
192-8M-85	9A	—	3525	90	488,92	487,55	—	198	455	95	65	15

8M Burçlu Triger Dişliler

__8__M Burçlu triger dişliler HTD ve STD çeşitlerinde imal edilebilmektedir. İçerisine takılan konik burçla istenilen mil çapına göre kolayca monte ve demonte edilebilir. Ayrıca delik işleme kama kanalı açma gibi işlemler yapılmaz. Salgısız ve balanssız olarak monte edilebilir.



ardmak

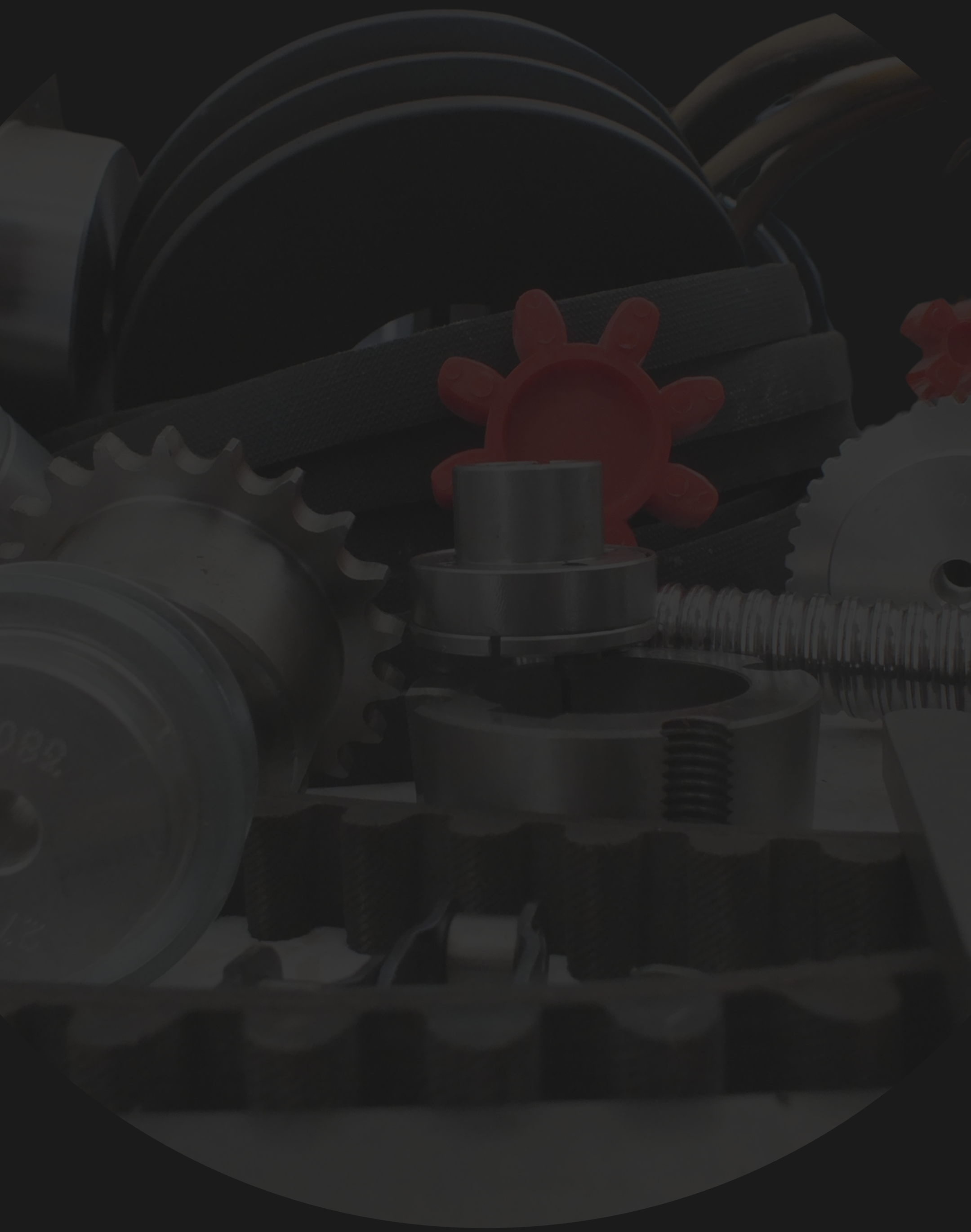

www.ardmakina.com
ard@ardmakina.com
0332 248 64 60