ardmak

XH

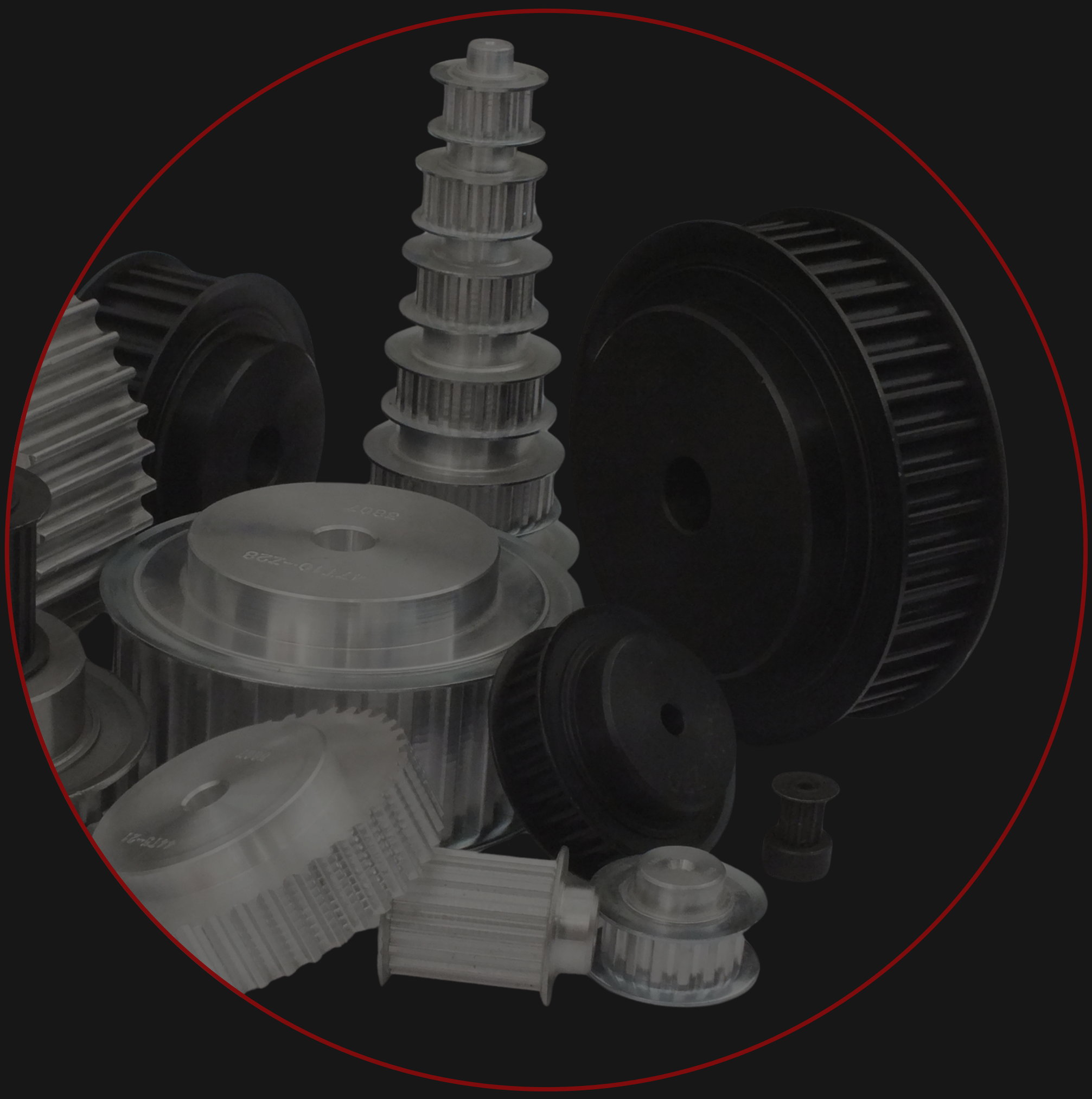

Plot Delikli Triger Dişliler

Plot Timing Belt Pulleys

www.ardmakina.com

PLOT DELİKLİ TRİGER DİŞLİLER
Timing Belt Pulleys

XH HATVELİ TRİGER DİŞLİLER — XH Timing Belt Pulleys

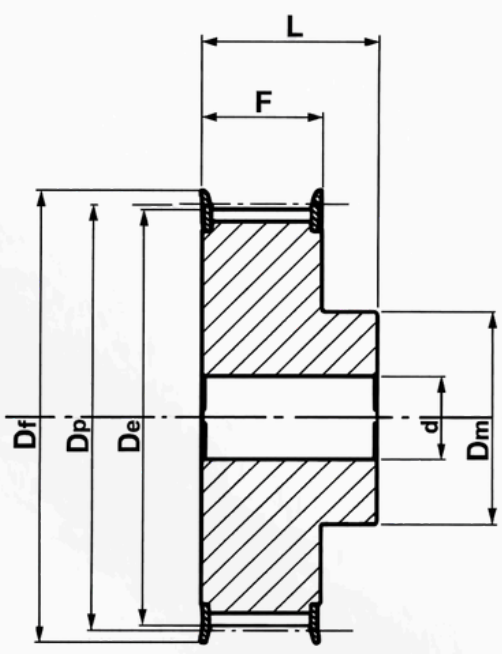

6F

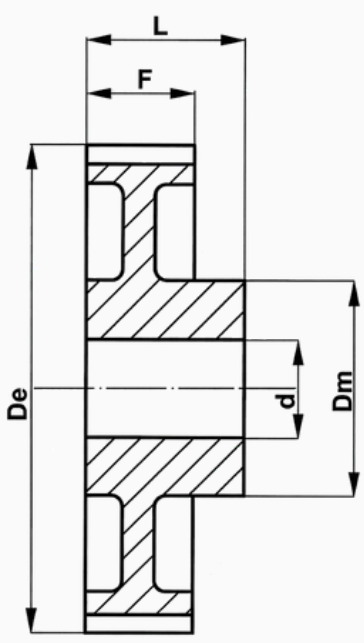

6W

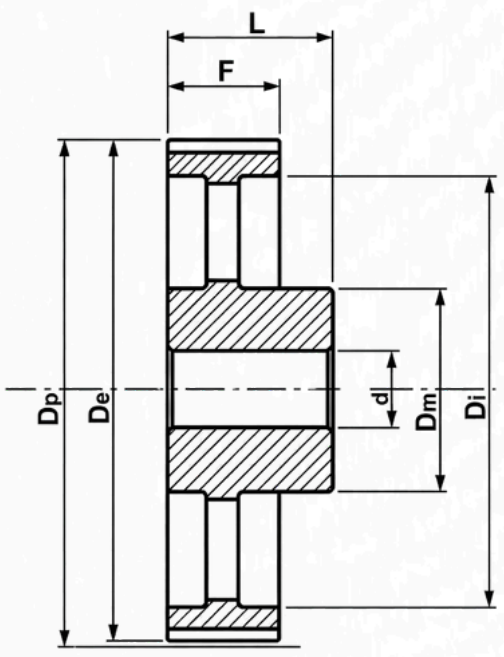

6A

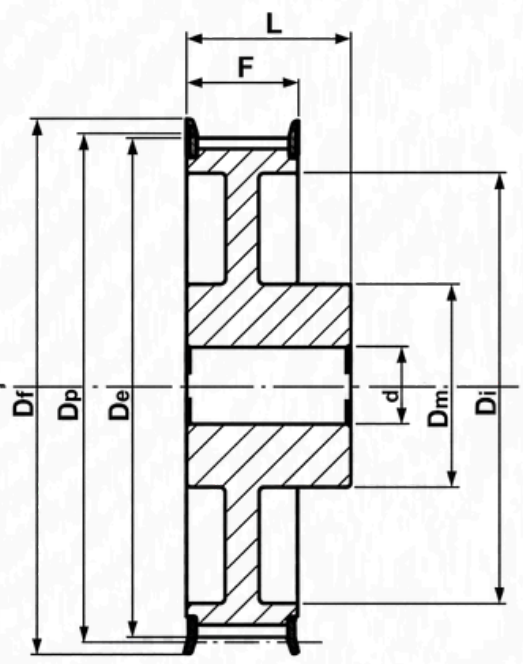

6WF

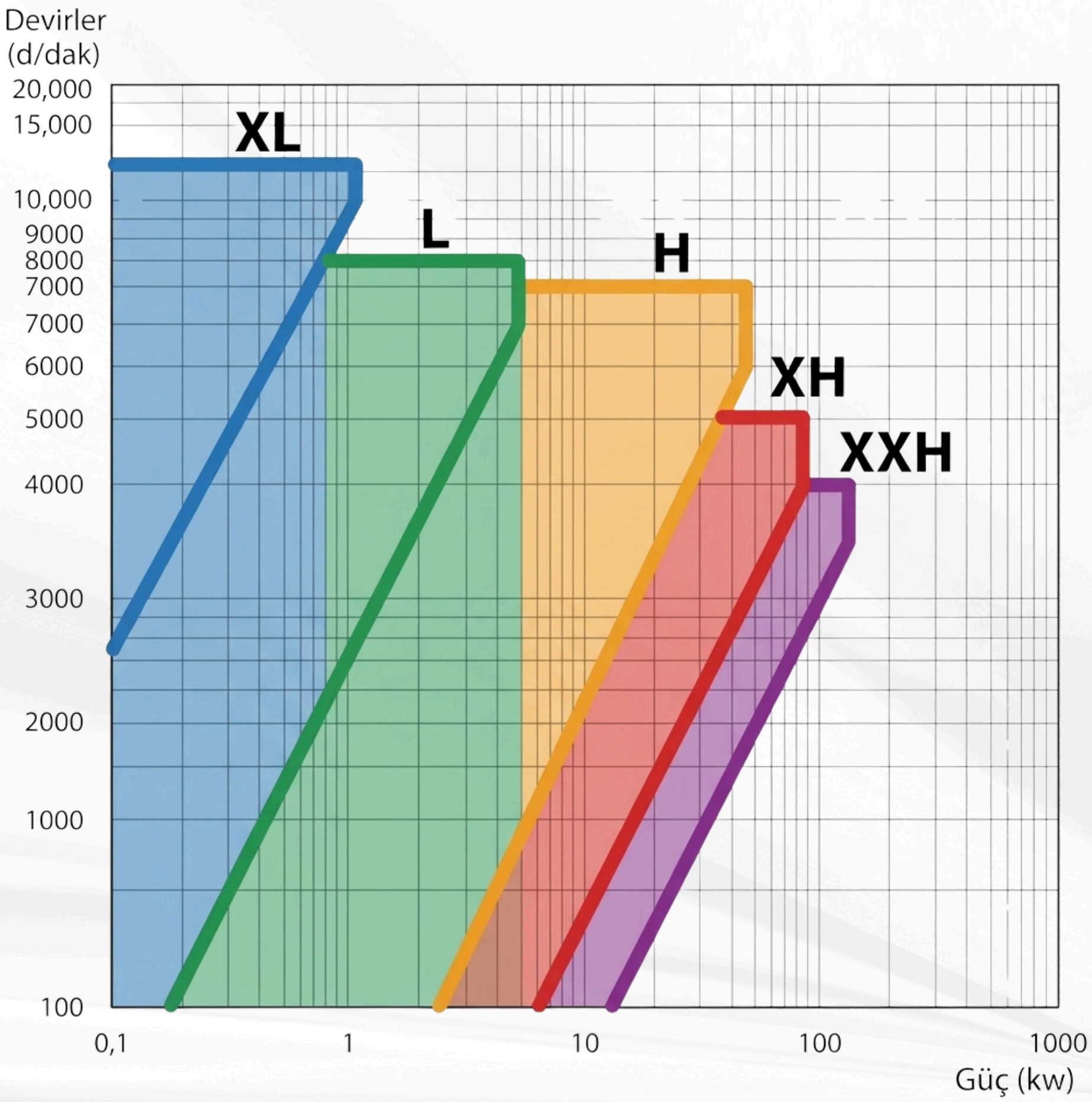

PLOT DELİKLİ TRİGER DİŞLİLER
Timing Belt Pulleys

XH HATVELİ TRİGER DİŞLİLER — XH Timing Belt Pulleys

XH-200

KOD (Code)	TİP (Type)	FLANŞ (Flange)	DİŞ SAYISI (Z)	Dp	De	Df	Dm	Di	F	L	d
18 XH 200	6F	F44	18	127,34	124,55	140	100	—	65	80	24
19 XH 200	6F	F46	19	134,41	131,62	146	100	—	65	80	24
20 XH 200	6F	F50	20	141,49	138,69	155	100	—	65	80	24
21 XH 200	6F	F51	21	148,56	145,77	160	110	—	65	80	24
22 XH 200	6F	F52	22	155,64	152,84	168	110	—	65	80	24
24 XH 200	6F	F81	24	169,79	166,99	184	120	—	65	80	24
25 XH 200	6F	F56	25	176,86	174,07	188	120	—	65	80	24
26 XH 200	6F	F59	26	183,94	181,14	200	120	—	65	80	24
27 XH 200	6F	F59	27	191,01	188,22	200	120	—	65	80	24
28 XH 200	6F	F61	28	198,08	195,29	212	150	—	65	80	24
30 XH 200	6F	F62	30	212,23	209,44	226	150	—	65	80	24
32 XH 200	6WF	F64	32	226,38	223,59	240	150	184	65	80	24
34 XH 200	6WF	F66	34	240,53	237,74	256	150	198	65	80	24
38 XH 200	6WF	F69	38	268,83	266,03	286	150	227	65	100	28
40 XH 200	6WF	F70	40	282,98	280,18	296	150	241	65	100	28
46 XH 200	6W	—	46	325,42	322,63	—	150	283	65	100	28
48 XH 200	6W	—	48	339,57	336,78	—	150	297	65	100	28
50 XH 200	6W	—	50	410,32	407,52	—	150	368	65	100	28
60 XH 200	6W	—	60	424,47	421,67	—	150	382	65	100	28
70 XH 200	6A	—	70	495,21	492,42	—	190	453	65	100	28
72 XH 200	6A	—	72	509,36	506,56	—	190	467	65	100	28
78 XH 200	6A	—	78	551,81	549,01	—	190	510	65	100	28
80 XH 200	6A	—	80	565,95	563,16	—	190	524	65	100	28
82 XH 200	6A	—	82	580,1	577,31	—	190	538	65	100	28
84 XH 200	6A	—	84	594,25	591,46	—	190	552	65	100	28
94 XH 200	6A	—	94	665	662,2	—	190	623	65	100	28
96 XH 200	6A	—	96	679,15	676,35	—	190	637	65	100	28
118 XH 200	6A	—	118	834,78	831,99	—	190	792	65	100	28
120 XH 200	6A	—	120	848,93	846,14	—	190	806	65	100	28



PLOT DELİKLİ TRİGER DİŞLİLER
Timing Belt Pulleys

XH HATVELİ TRİGER DİŞLİLER — XH Timing Belt Pulleys

XH-300

KOD (Code)	TİP (Type)	FLANŞ (Flange)	DİŞ SAYISI (Z)	Dp	De	Df	Dm	Di	F	L	d
18 XH 300	6F	F44	18	127,34	124,55	140	100	—	90,5	110	28
19 XH 300	6F	F46	19	134,41	131,62	146	100	—	90,5	110	28
20 XH 300	6F	F50	20	141,49	138,69	155	100	—	90,5	110	28
21 XH 300	6F	F51	21	148,56	145,77	160	110	—	90,5	110	28
22 XH 300	6F	F52	22	155,64	152,84	168	110	—	90,5	110	28
24 XH 300	6F	F81	24	169,79	166,99	184	120	—	90,5	110	28
25 XH 300	6F	F56	25	176,86	174,07	188	120	—	90,5	110	28
26 XH 300	6F	F59	26	183,94	181,14	200	120	—	90,5	110	28
27 XH 300	6F	F59	27	191,01	188,22	200	120	—	90,5	110	28
28 XH 300	6F	F61	28	198,08	195,29	212	150	—	90,5	110	28
30 XH 300	6F	F62	30	212,23	209,44	226	150	—	90,5	110	28
32 XH 300	6WF	F64	32	226,38	223,59	240	150	—	90,5	110	28
34 XH 300	6WF	F66	34	240,53	237,74	256	150	198	90,5	110	28
38 XH 300	6WF	F69	38	268,83	266,03	286	175	227	90,5	120	32
40 XH 300	6WF	F70	40	282,98	280,18	296	175	241	90,5	120	32
46 XH 300	6W	—	46	325,42	322,63	—	175	283	90,5	120	32
48 XH 300	6W	—	48	339,57	336,78	—	175	297	90,5	120	32
50 XH 300	6W	—	50	410,32	407,52	—	175	368	90,5	120	32
60 XH 300	6W	—	60	424,47	421,67	—	175	382	90,5	120	32
70 XH 300	6A	—	70	495,21	492,42	—	175	453	90,5	120	32
72 XH 300	6A	—	72	509,36	506,56	—	175	467	90,5	120	32
78 XH 300	6A	—	78	551,81	549,01	—	175	510	90,5	120	32
80 XH 300	6A	—	80	565,95	563,16	—	175	524	90,5	120	32
82 XH 300	6A	—	82	580,1	577,31	—	175	538	90,5	120	32
84 XH 300	6A	—	84	594,25	591,46	—	175	552	90,5	120	32
94 XH 300	6A	—	94	665	662,2	—	175	623	90,5	120	32
96 XH 300	6A	—	96	679,15	676,35	—	175	637	90,5	120	32
118 XH 300	6A	—	118	834,78	831,99	—	175	792	90,5	120	32
120 XH 300	6A	—	120	848,93	846,14	—	175	806	90,5	120	32

XH Plot Delikli Triger Dişliler

XH Hatveli plot delikli triger dişliler flanşlı ve flanşsız olarak imal edilmektedir. Çelik malzemeden imal edilebilir. Standart üretimin yanında özel imalatta yapılabilmektedir. Detaylı bilgi için teknik kataloğumuzu inceleyebilirsiniz.

PLOT DELİKLİ TRİGER DİŞLİLER
Timing Belt Pulleys

XH HATVELİ TRİGER DİŞLİLER — XH Timing Belt Pulleys

XH-400

KOD (Code)	TİP (Type)	FLANŞ (Flange)	DİŞ SAYISI (Z)	Dp	De	Df	Dm	Di	F	L	d
18 XH 400	6F	F44	18	127,34	124,55	140	100	—	118	132	32
19 XH 400	6F	F46	19	134,41	131,62	146	100	—	118	132	32
20 XH 400	6F	F50	20	141,49	138,69	154	100	—	118	132	32
21 XH 400	6F	F51	21	148,56	145,77	160	110	—	118	132	32
22 XH 400	6F	F52	22	155,64	152,84	168	110	—	118	132	32
24 XH 400	6F	F81	24	169,79	166,99	184	120	—	118	132	32
25 XH 400	6F	F56	25	176,86	174,07	192	120	—	118	132	32
26 XH 400	6F	F59	26	183,94	181,14	200	120	—	118	132	32
27 XH 400	6F	F59	27	191,01	188,22	200	120	—	118	132	32
28 XH 400	6F	F61	28	198,08	195,29	211	150	—	118	132	32
30 XH 400	6F	F62	30	212,23	209,44	226	150	—	118	132	32
32 XH 400	6F	F64	32	226,38	223,59	240	150	—	118	132	32
34 XH 400	6F	F66	34	240,53	237,74	256	150	—	118	132	32
38 XH 400	6WF	F69	38	268,83	266,03	286	150	227	118	132	32
40 XH 400	6WF	F70	40	282,98	280,18	296	150	241	118	132	32
46 XH 400	6W	—	46	325,42	322,63	—	175	283	118	132	32
48 XH 400	6W	—	48	339,57	336,78	—	175	297	118	132	32
50 XH 400	6W	—	50	410,32	407,52	—	175	368	118	132	32
60 XH 400	6W	—	60	424,47	421,67	—	175	382	118	132	32
70 XH 400	6A	—	70	495,21	492,42	—	175	453	118	132	32
72 XH 400	6A	—	72	509,36	506,56	—	175	467	118	132	32
78 XH 400	6A	—	78	551,81	549,01	—	175	510	118	132	32
80 XH 400	6A	—	80	565,95	563,16	—	175	524	118	132	32
82 XH 400	6A	—	82	580,1	577,31	—	175	538	118	132	32
84 XH 400	6A	—	84	594,25	591,46	—	175	552	118	132	32
94 XH 400	6A	—	94	665	662,2	—	175	623	118	132	32
96 XH 400	6A	—	96	679,15	676,35	—	175	637	118	132	32
118 XH 400	6A	—	118	834,78	831,99	—	175	792	118	132	32
120 XH 400	6A	—	120	848,93	846,14	—	175	806	118	132	32

ardmak

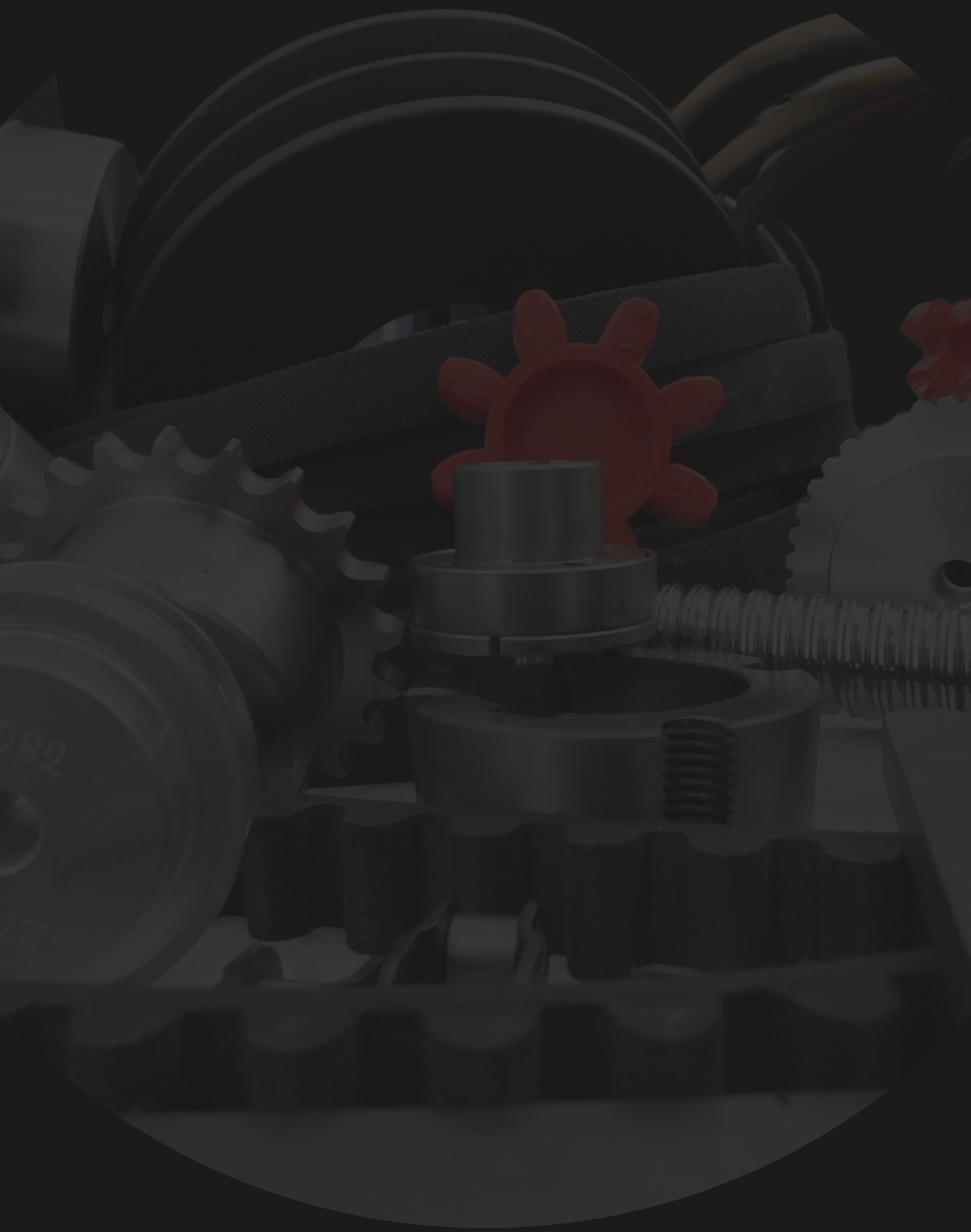

www.ardmakina.com
ard@ardmakina.com
0332 248 64 60