ardmak

HTD 8M

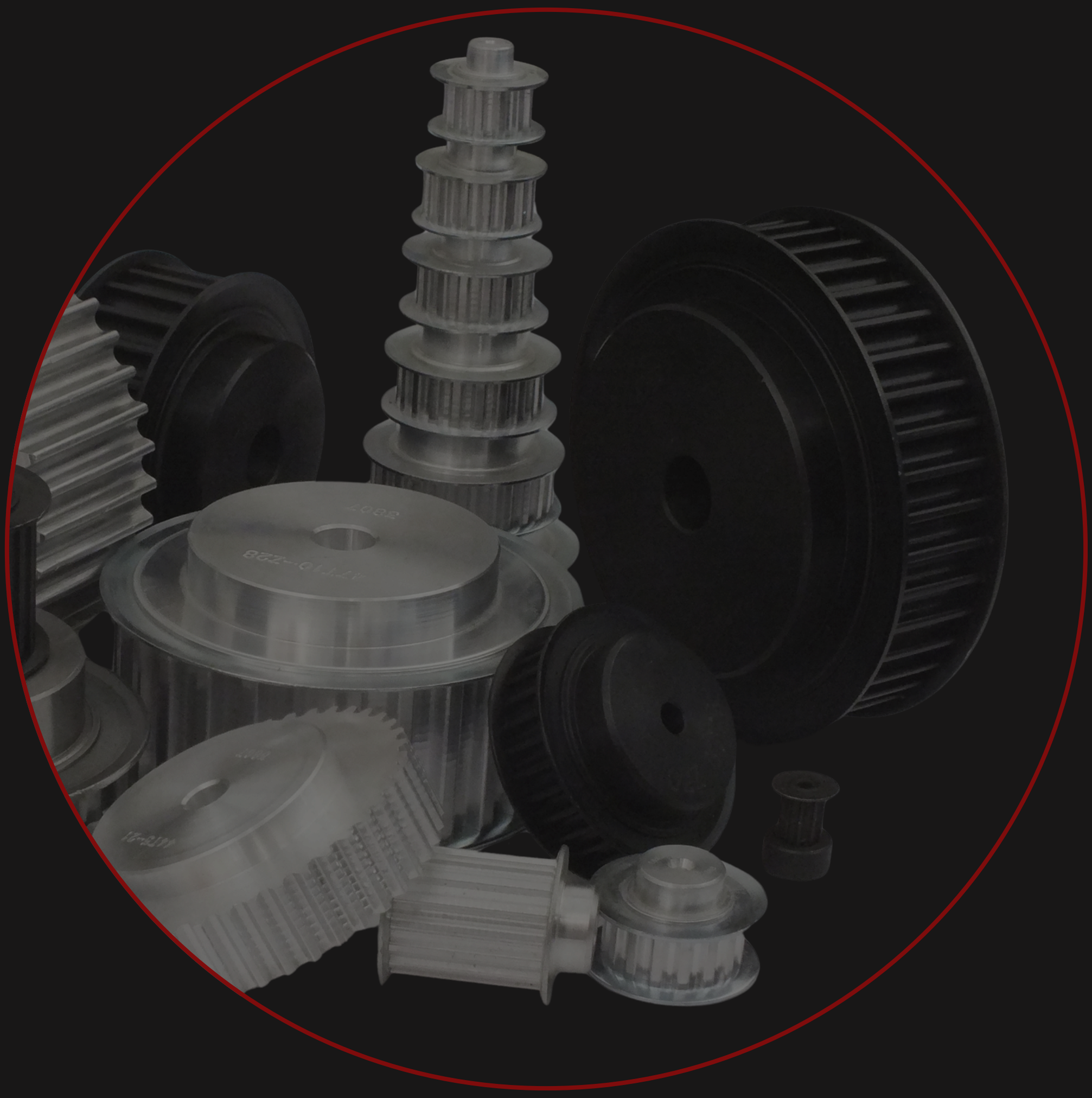

Plot Delikli Triger Dişliler

Plot Timing Belt Pulleys

www.ardmakina.com

PLOT DELİKLİ TRİGER DİŞLİLER
Timing Belt Pulleys

HTD 8M HATVELİ TRİGER DİŞLİLER HTD 8M Timing Belt Pulleys

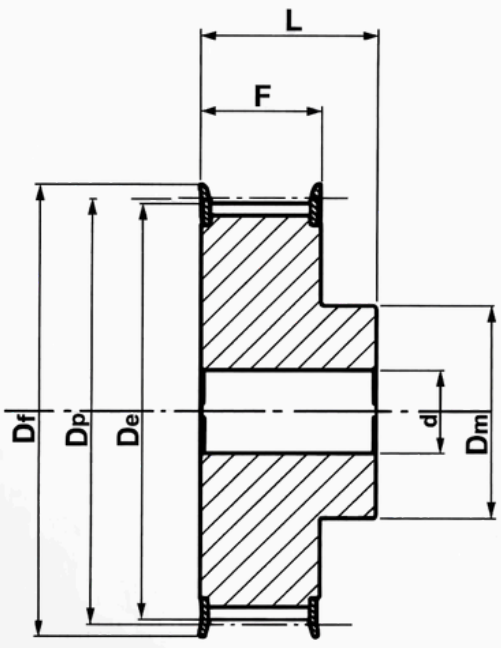

6F

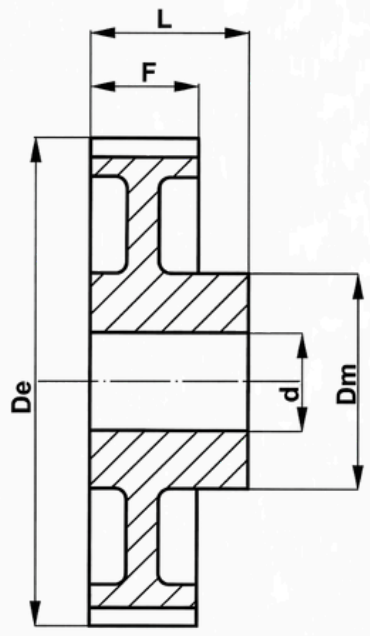

6W

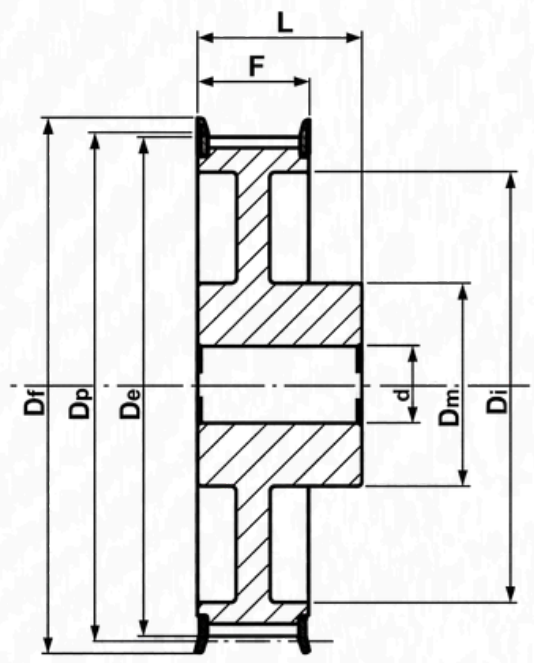

6WF

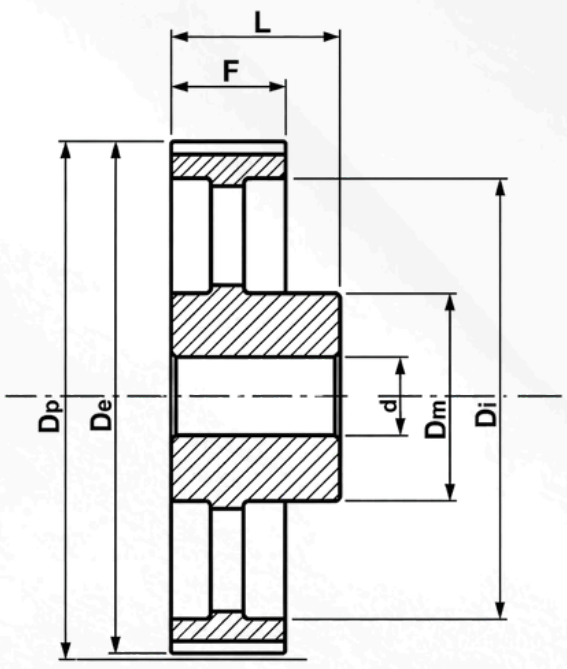

6A

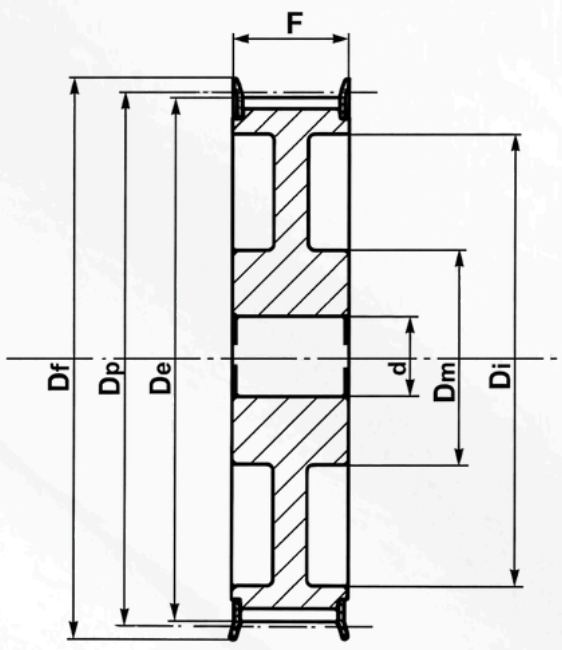

10WF

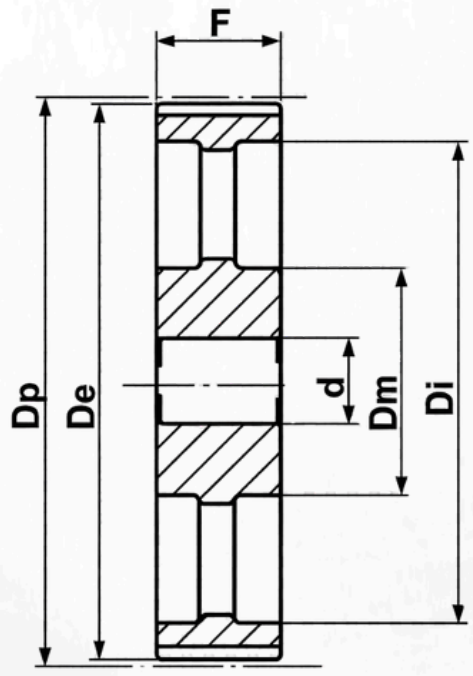

10A

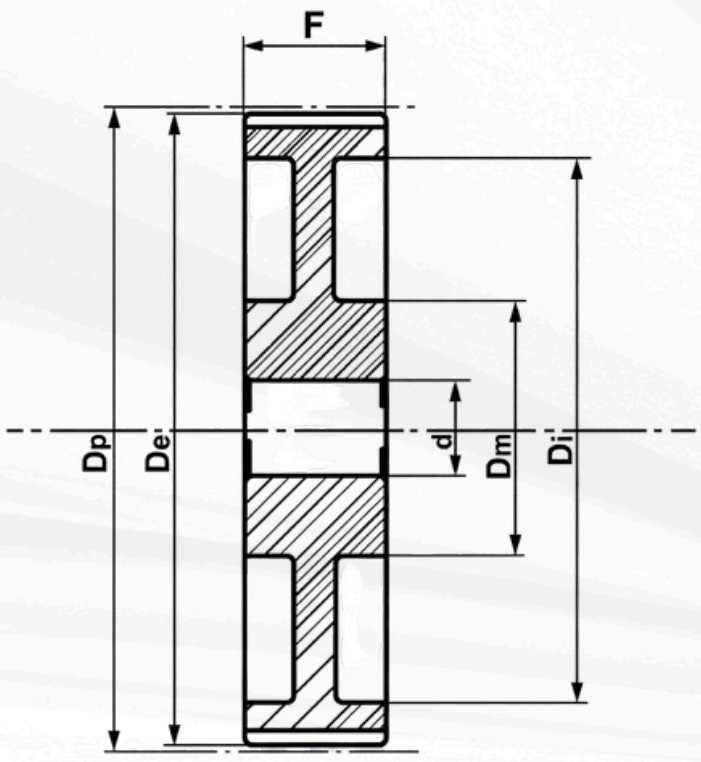

10W

ardmak

PLOT DELİKLİ TRİGER DİŞLİLER
Timing Belt Pulleys

HTD 8M HATVELİ TRİGER DİŞLİLER HTD 8M Timing Belt Pulleys

8M-20

KOD (Code)	TİP (Type)	FLANŞ (Flange)	DİŞ SAYISI (Z)	Dp	De	Df	Dm	Di	F	L	d
22-8M-20	6F	F22	22	56,02	54,65	60	43	—	28	38	12
24-8M-20	6F	F25	24	61,12	59,75	66	45	—	28	38	12
26-8M-20	6F	F26	26	66,21	64,84	70	48	—	28	38	12
28-8M-20	6F	F27	28	71,3	70,08	75	50	—	28	38	15
30-8M-20	6F	F29	30	76,39	75,13	83	55	—	28	38	15
32-8M-20	6F	F30	32	81,49	80,16	87	60	—	28	38	15
34-8M-20	6F	F31	34	86,58	85,22	91	70	—	28	38	15
36-8M-20	6F	F33	36	91,67	90,3	97	75	—	28	38	15
38-8M-20	6F	F34	38	96,77	95,39	102	75	—	28	38	15
40-8M-20	6F	F35	40	101,9	100,5	106	75	—	28	38	15
44-8M-20	6F	F38	44	112,1	110,7	120	75	—	28	38	15
48-8M-20	6F	F40	48	122,2	120,9	128	75	—	28	38	15
56-8M-20	6WF	F48	56	142,6	141,2	150	80	116	28	38	15
64-8M-20	6WF	F52	64	163	161,6	168	80	137	28	38	15
72-8M-20	6WF	F57	72	183,4	182	192	80	158	28	38	15
80-8M-20	6W	—	80	203,7	202,4	—	90	180	28	38	15
90-8M-20	6A	—	90	229,2	227,8	—	90	204	28	38	15
112-8M-20	6A	—	112	285,2	283,8	—	90	254	28	38	18
144-8M-20	6A	—	144	366,7	365,3	—	90	336	28	38	20

8M-30

KOD (Code)	TİP (Type)	FLANŞ (Flange)	DİŞ SAYISI (Z)	Dp	De	Df	Dm	Di	F	L	d
22-8M-30	6F	F22	22	56,02	54,65	60	43	—	38	48	12
24-8M-30	6F	F25	24	61,12	59,75	66	45	—	38	48	12
26-8M-30	6F	F26	26	66,21	64,84	70	48	—	38	48	12
28-8M-30	6F	F27	28	71,3	70,08	75	50	—	38	48	15
30-8M-30	6F	F29	30	76,39	75,13	83	55	—	38	48	15
32-8M-30	6F	F30	32	81,49	80,16	87	60	—	38	48	15
34-8M-30	6F	F31	34	86,58	85,22	91	70	—	38	48	15
36-8M-30	6F	F33	36	91,67	90,3	97	75	—	38	48	15
38-8M-30	6F	F34	38	96,77	95,39	102	75	—	38	48	15
40-8M-30	6F	F35	40	101,9	100,5	106	75	—	38	48	15
44-8M-30	6F	F38	44	112,1	110,7	120	75	—	38	48	15
48-8M-30	6F	F40	48	122,2	120,9	128	75	—	38	48	15
56-8M-30	6WF	F48	56	142,6	141,2	150	90	116	38	48	15
64-8M-30	6WF	F52	64	163	161,6	168	90	137	38	48	15
72-8M-30	6WF	F57	72	183,4	182	192	95	158	38	48	15
80-8M-30	6W	—	80	203,7	202,4	—	100	180	38	48	15
90-8M-30	6A	—	90	229,2	227,8	—	100	204	38	48	15
112-8M-30	6A	—	112	285,2	283,8	—	100	254	38	48	18
144-8M-30	6A	—	144	366,7	365,3	—	100	336	38	48	20

ardmak

PLOT DELİKLİ TRİGER DİŞLİLER
Timing Belt Pulleys

HTD 8M HATVELİ TRİGER DİŞLİLER HTD 8M Timing Belt Pulleys

8M-50

KOD (Code)	TİP (Type)	FLANŞ (Flange)	DİŞ SAYISI (Z)	Dp	De	Df	Dm	Di	F	L	d
22-8M-50	6F	F22	22	56,02	54,65	60	43	—	60	70	12
24-8M-50	6F	F25	24	61,12	59,75	66	45	—	60	70	12
26-8M-50	6F	F26	26	66,21	64,84	70	48	—	60	70	15
28-8M-50	6F	F27	28	71,3	70,08	75	50	—	60	70	15
30-8M-50	6F	F29	30	76,39	75,13	83	55	—	60	70	15
32-8M-50	6F	F30	32	81,49	80,16	87	60	—	60	70	15
34-8M-50	6F	F31	34	86,58	85,22	91	66	—	60	70	15
36-8M-50	6F	F33	36	91,67	90,3	97	70	—	60	70	15
38-8M-50	6F	F34	38	96,77	95,39	102	75	—	60	70	15
40-8M-50	6F	F35	40	101,9	100,5	106	75	—	60	70	18
44-8M-50	6F	F38	44	112,1	110,7	120	75	—	60	70	18
48-8M-50	6F	F40	48	122,2	120,9	128	80	—	60	70	18
56-8M-50	10WF	F48	56	142,6	141,2	150	90	116	60	70	18
64-8M-50	10WF	F52	64	163	161,6	168	100	137	60	70	18
72-8M-50	10WF	F57	72	183,4	182	192	100	158	60	70	18
80-8M-50	10W	—	80	203,7	202,4	—	110	180	60	70	18
90-8M-50	10A	—	90	229,2	227,8	—	110	204	60	70	18
112-8M-50	10A	—	112	285,2	283,8	—	110	254	60	70	18
144-8M-50	10A	—	144	366,7	365,3	—	110	336	60	70	20

8M-85

KOD (Code)	TİP (Type)	FLANŞ (Flange)	DİŞ SAYISI (Z)	Dp	De	Df	Dm	Di	F	L	d
22-8M-85	6F	F22	22	56,02	54,65	60	43	—	95	105	12
24-8M-85	6F	F25	24	61,12	59,75	66	45	—	95	105	12
26-8M-85	6F	F26	26	66,21	64,84	70	48	—	95	105	12
28-8M-85	6F	F27	28	71,3	70,08	75	50	—	95	105	15
30-8M-85	6F	F29	30	76,39	75,13	83	55	—	95	105	15
32-8M-85	6F	F30	32	81,49	80,16	87	60	—	95	105	15
34-8M-85	6F	F31	34	86,58	85,22	91	66	—	95	105	15
36-8M-85	6F	F33	36	91,67	90,3	97	70	—	95	105	15
38-8M-85	6F	F34	38	96,77	95,39	102	75	—	95	105	15
40-8M-85	6F	F35	40	101,9	100,5	106	75	—	95	105	18
44-8M-85	6F	F38	44	112,1	110,7	120	75	—	95	105	18
48-8M-85	6F	F40	48	122,2	120,9	128	80	—	95	105	18
56-8M-85	6F	F48	56	142,6	141,2	150	90	—	95	105	18
64-8M-85	10WF	F52	64	163	161,6	168	100	137	95	95	20
72-8M-85	10WF	F57	72	183,4	182	192	100	158	95	95	20
80-8M-85	10W	—	80	203,7	202,4	—	110	180	95	95	20
90-8M-85	10A	—	90	229,2	227,8	—	110	204	95	95	20
112-8M-85	10A	—	112	285,2	283,8	—	110	254	95	95	24
144-8M-85	10A	—	144	366,7	365,3	—	110	336	95	95	24

GÜÇ DEVİR TABLOSU

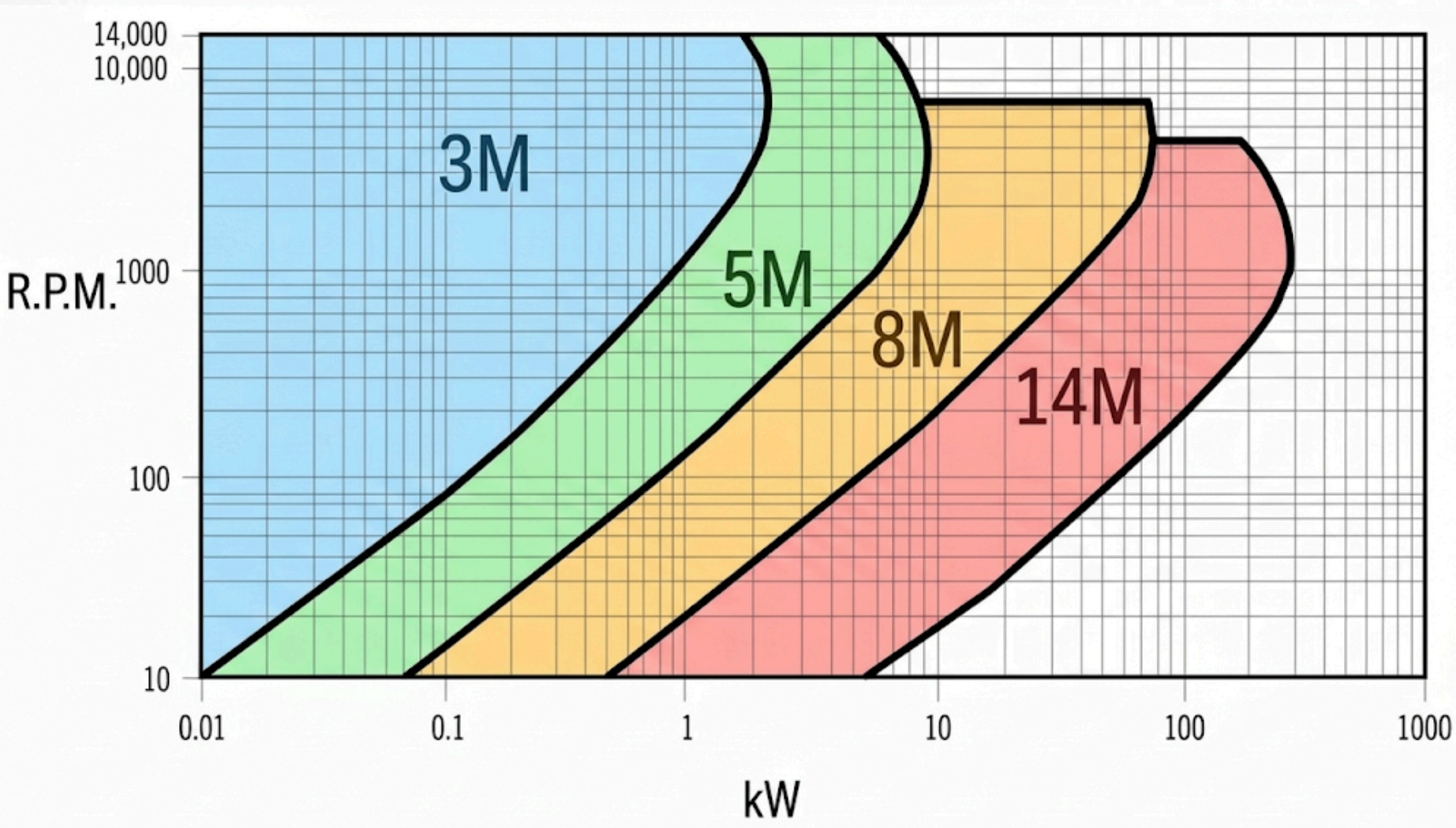

8M Plot Delikli Triger Dişliler

8M Hatveli plot delikli triger dişliler flanşlı ve flanşsız olarak imal edilmektedir. Alüminyum ve çelik malzemeden imal edilebilir. çok küçük çaplarda imal edilebildiği için servo motor, step motorlarda yoğun olarak kullanılmaktadır. Standart üretimin yanında özel imalatta yapılabilmektedir.



ardmak

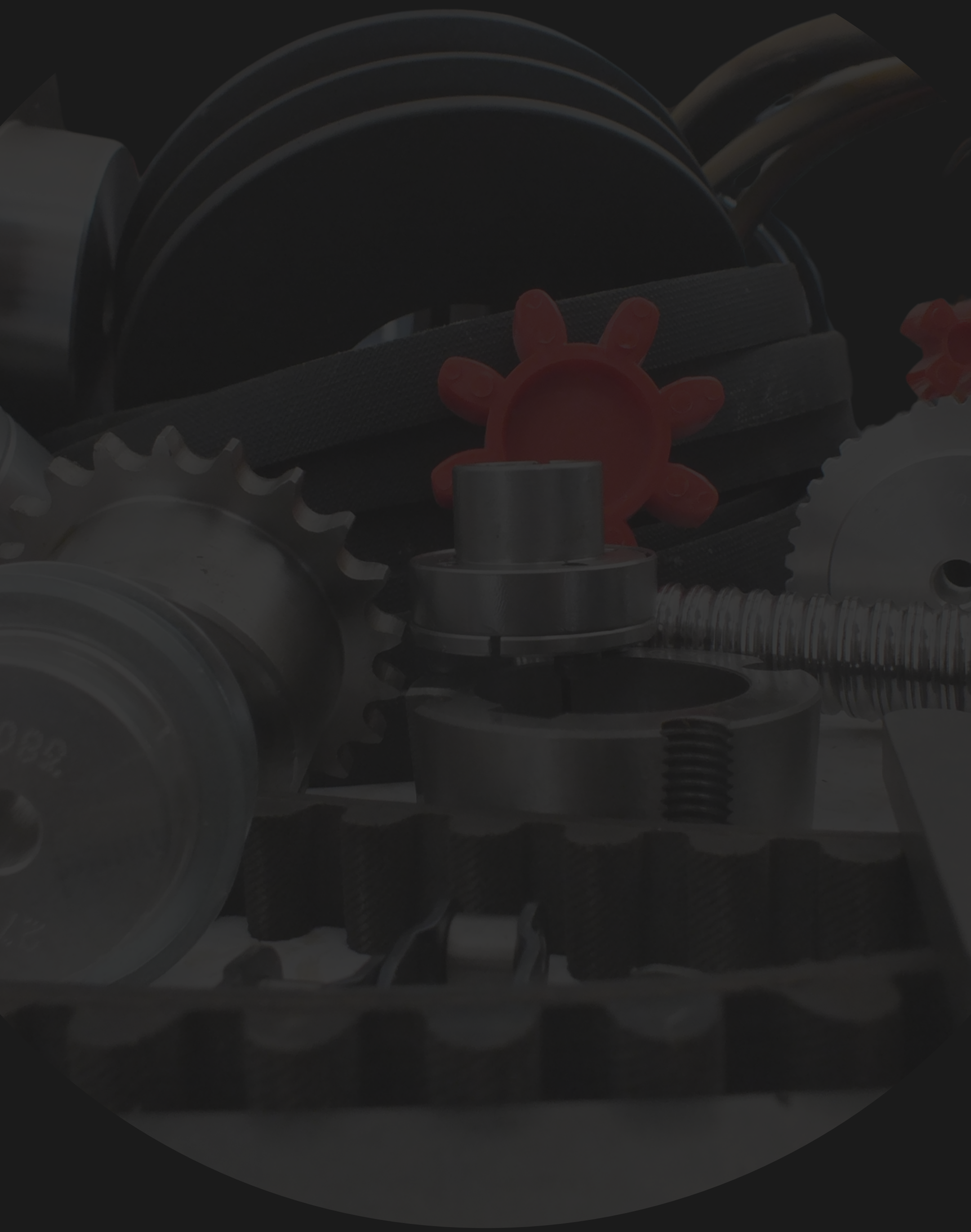

www.ardmakina.com
ard@ardmakina.com
0332 248 64 60