ardmak

# HTD 14M

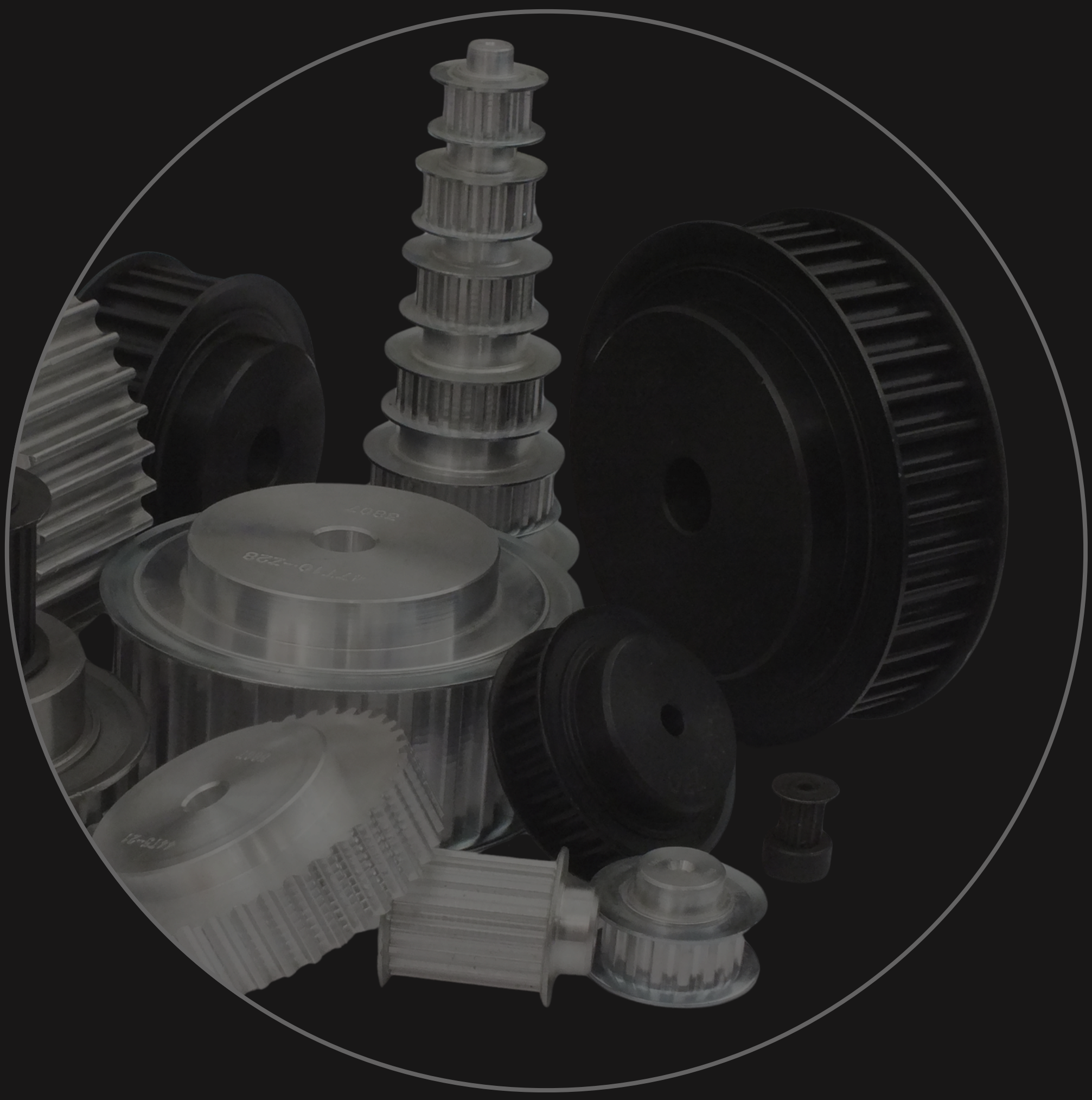

## Plot Delikli Triger Dişliler

*Plot Timing Belt Pulleys*

www.ardmakina.com

# PLOT DELİKLİ TRİGER DİŞLİLER
## *Timing Belt Pulleys*

HTD 14M HATVELİ TRİGER DİŞLİLER HTD 14M Timing Belt Pulleys

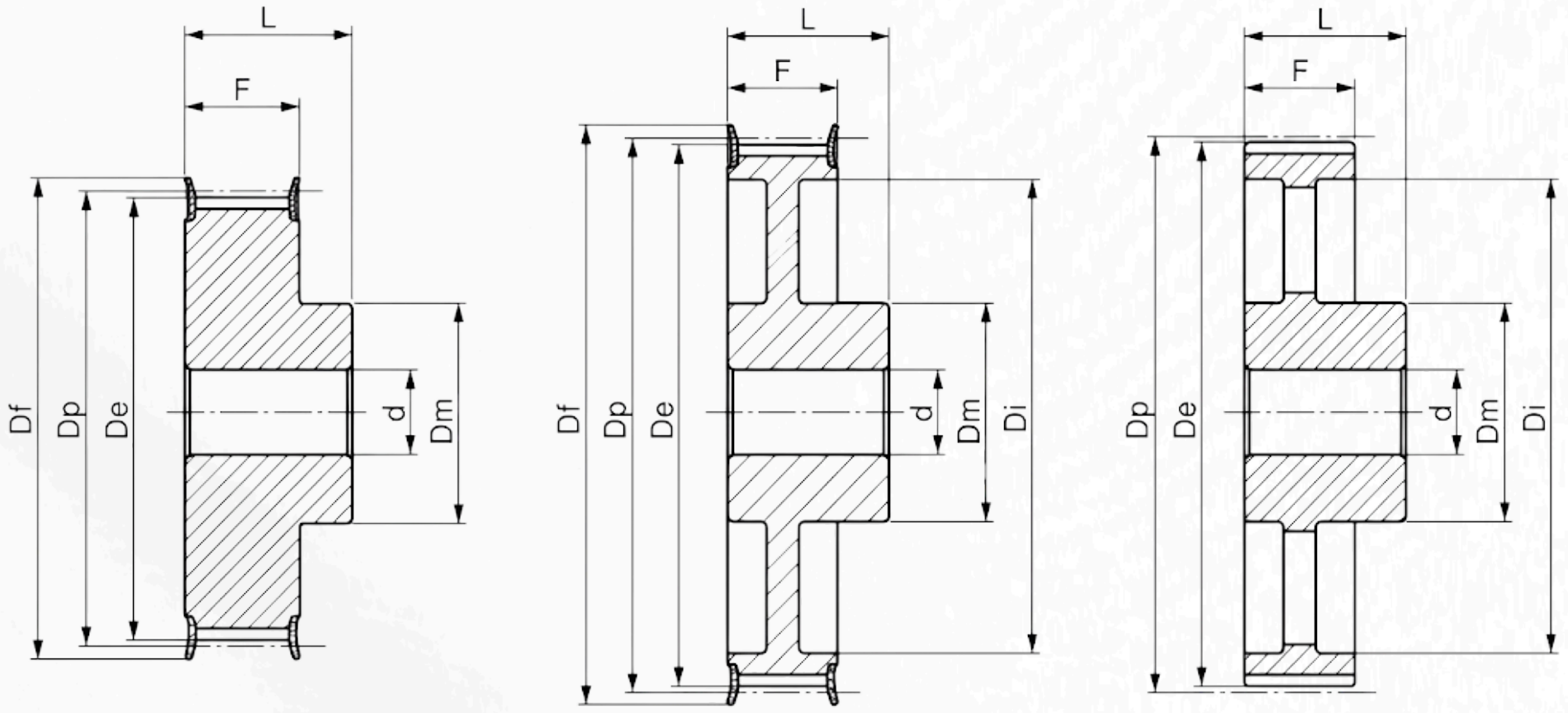


## 14M-40

| KOD (Code) | TİP (Type) | FLANŞ (Flange) | DİŞ SAYISI (Z) | Dp | De | Df | Dm | Di | F | L | d |
|---|---|---|---|---|---|---|---|---|---|---|---|
| 28-14M-40 | 6F | F40 | 28 | 124,78 | 122,12 | 128 | 100 | — | 54 | 69 | 24 |
| 29-14M-40 | 6F | F43 | 29 | 129,23 | 126,57 | 138 | 100 | — | 54 | 69 | 24 |
| 30-14M-40 | 6F | F43 | 30 | 133,69 | 130,99 | 138 | 100 | — | 54 | 69 | 24 |
| 32-14M-40 | 6F | F49 | 32 | 142,6 | 139,88 | 154 | 100 | — | 54 | 69 | 24 |
| 34-14M-40 | 6F | F51 | 34 | 151,52 | 148,79 | 160 | 100 | — | 54 | 69 | 24 |
| 36-14M-40 | 6F | F52 | 36 | 160,43 | 157,68 | 168 | 100 | — | 54 | 69 | 24 |
| 38-14M-40 | 6F | F81 | 38 | 169,34 | 166,6 | 184 | 120 | — | 54 | 69 | 24 |
| 40-14M-40 | 6F | F56 | 40 | 178,25 | 175,49 | 188 | 120 | — | 54 | 69 | 24 |
| 44-14M-40 | 6F | F61 | 44 | 196,08 | 193,28 | 212 | 120 | — | 54 | 69 | 24 |
| 48-14M-40 | 6WF | F62 | 48 | 213,9 | 211,11 | 226 | 135 | 170 | 54 | 69 | 24 |
| 56-14M-40 | 6WF | F66 | 56 | 249,55 | 246,76 | 256 | 135 | 207 | 54 | 69 | 28 |
| 64-14M-40 | 6WF | F70 | 64 | 285,21 | 282,41 | 296 | 135 | 240 | 54 | 69 | 28 |
| 72-14M-40 | 6A | — | 72 | 320,86 | 318,06 | — | 135 | 278 | 54 | 69 | 28 |
| 80-14M-40 | 6A | — | 80 | 356,51 | 353,71 | — | 135 | 314 | 54 | 69 | 28 |
| 90-14M-40 | 6A | — | 90 | 401,07 | 398,28 | — | 135 | 358 | 54 | 69 | 28 |
| 112-14M-40 | 6A | — | 112 | 499,11 | 496,32 | — | 135 | 456 | 54 | 69 | 28 |
| 144-14M-40 | 6A | — | 144 | 641,71 | 638,92 | — | 135 | 600 | 54 | 69 | 28 |

# PLOT DELİKLİ TRİGER DİŞLİLER
## Timing Belt Pulleys

HTD 14M HATVELİ TRİGER DİŞLİLER HTD 14M Timing Belt Pulleys

### 14M-55

| KOD (Code) | TİP (Type) | FLANŞ (Flange) | DİŞ SAYISI (Z) | Dp | De | Df | Dm | Di | F | L | d |
|---|---|---|---|---|---|---|---|---|---|---|---|
| 28-14M-55 | 6F | F40 | 28 | 124,78 | 122,12 | 128 | 100 | — | 70 | 85 | 24 |
| 29-14M-55 | 6F | F43 | 29 | 129,23 | 126,57 | 138 | 100 | — | 70 | 85 | 24 |
| 30-14M-55 | 6F | F43 | 30 | 133,69 | 130,99 | 138 | 100 | — | 70 | 85 | 24 |
| 32-14M-55 | 6F | F49 | 32 | 142,6 | 139,88 | 154 | 100 | — | 70 | 85 | 24 |
| 34-14M-55 | 6F | F51 | 34 | 151,52 | 148,79 | 160 | 100 | — | 70 | 85 | 24 |
| 36-14M-55 | 6F | F52 | 36 | 160,43 | 157,68 | 168 | 100 | — | 70 | 85 | 24 |
| 38-14M-55 | 6F | F81 | 38 | 169,34 | 166,6 | 184 | 120 | — | 70 | 85 | 24 |
| 40-14M-55 | 6F | F56 | 40 | 178,25 | 175,49 | 188 | 120 | — | 70 | 85 | 24 |
| 44-14M-55 | 6F | F61 | 44 | 196,08 | 193,28 | 212 | 120 | — | 70 | 85 | 24 |
| 48-14M-55 | 10WF | F62 | 48 | 213,9 | 211,11 | 226 | 135 | 170 | 70 | 70 | 24 |
| 56-14M-55 | 10WF | F66 | 56 | 249,55 | 246,76 | 256 | 135 | 207 | 70 | 70 | 28 |
| 64-14M-55 | 10WF | F70 | 64 | 285,21 | 282,41 | 296 | 135 | 240 | 70 | 70 | 28 |
| 72-14M-55 | 10A | | 72 | 320,86 | 318,06 | — | 135 | 278 | 70 | 70 | 28 |
| 80-14M-55 | 10A | | 80 | 356,51 | 353,71 | — | 135 | 314 | 70 | 70 | 28 |
| 90-14M-55 | 10A | | 90 | 401,07 | 398,28 | — | 135 | 358 | 70 | 70 | 28 |
| 112-14M-55 | 10A | | 112 | 499,11 | 496,32 | — | 135 | 456 | 70 | 70 | 28 |
| 144-14M-55 | 10A | | 144 | 641,71 | 638,92 | — | 135 | 600 | 70 | 70 | 28 |

### 14M-85

| KOD (Code) | TİP (Type) | FLANŞ (Flange) | DİŞ SAYISI (Z) | Dp | De | Df | Dm | Di | F | L | d |
|---|---|---|---|---|---|---|---|---|---|---|---|
| 28-14M-85 | 6F | F40 | 28 | 124,78 | 122,12 | 128 | 100 | — | 102 | 117 | 24 |
| 29-14M-85 | 6F | F43 | 29 | 129,23 | 126,57 | 138 | 100 | — | 102 | 117 | 24 |
| 30-14M-85 | 6F | F43 | 30 | 133,69 | 130,99 | 138 | 100 | — | 102 | 117 | 24 |
| 32-14M-85 | 6F | F49 | 32 | 142,6 | 139,88 | 154 | 100 | — | 102 | 117 | 24 |
| 34-14M-85 | 6F | F51 | 34 | 151,52 | 148,79 | 160 | 100 | — | 102 | 117 | 24 |
| 36-14M-85 | 6F | F52 | 36 | 160,43 | 157,68 | 168 | 100 | — | 102 | 117 | 32 |
| 38-14M-85 | 6F | F81 | 38 | 169,34 | 166,6 | 184 | 120 | — | 102 | 117 | 32 |
| 40-14M-85 | 6F | F56 | 40 | 178,25 | 175,49 | 188 | 135 | — | 102 | 117 | 32 |
| 44-14M-85 | 6F | F61 | 44 | 196,08 | 193,28 | 212 | 135 | — | 102 | 117 | 32 |
| 48-14M-85 | 6F | F62 | 48 | 213,9 | 211,11 | 226 | 150 | — | 102 | 117 | 32 |
| 56-14M-85 | 10WF | F66 | 56 | 249,55 | 246,76 | 256 | 150 | 207 | 102 | 117 | 32 |
| 64-14M-85 | 10WF | F70 | 64 | 285,21 | 282,41 | 296 | 150 | 240 | 102 | 102 | 32 |
| 72-14M-85 | 10A | | 72 | 320,86 | 318,06 | — | 150 | 278 | 102 | 102 | 32 |
| 80-14M-85 | 10A | | 80 | 356,51 | 353,71 | — | 150 | 314 | 102 | 102 | 32 |
| 90-14M-85 | 10A | | 90 | 401,07 | 398,28 | — | 150 | 358 | 102 | 102 | 32 |
| 112-14M-85 | 10A | | 112 | 499,11 | 496,32 | — | 150 | 456 | 102 | 102 | 32 |
| 144-14M-85 | 10A | | 144 | 641,71 | 638,92 | — | 150 | 600 | 102 | 102 | 32 |

ardmak

# PLOT DELİKLİ TRİGER DİŞLİLER
## Timing Belt Pulleys

HTD 14M HATVELİ TRİGER DİŞLİLER HTD 14M Timing Belt Pulleys

### 14M-115

| KOD (Code) | TİP (Type) | FLANŞ (Flange) | DİŞ SAYISI (Z) | Dp | De | Df | Dm | Di | F | L | d |
|---|---|---|---|---|---|---|---|---|---|---|---|
| 28-14M-115 | 6F | F40 | 28 | 124,78 | 122,12 | 128 | 100 | — | 133 | 148 | 32 |
| 29-14M-115 | 6F | F43 | 29 | 129,23 | 126,57 | 138 | 100 | — | 133 | 148 | 32 |
| 30-14M-115 | 6F | F43 | 30 | 133,69 | 130,99 | 138 | 100 | — | 133 | 148 | 32 |
| 32-14M-115 | 6F | F49 | 32 | 142,6 | 139,88 | 154 | 100 | — | 133 | 148 | 32 |
| 34-14M-115 | 6F | F51 | 34 | 151,52 | 148,79 | 160 | 100 | — | 133 | 148 | 32 |
| 36-14M-115 | 6F | F52 | 36 | 160,43 | 157,68 | 168 | 100 | — | 133 | 148 | 32 |
| 38-14M-115 | 6F | F81 | 38 | 169,34 | 166,6 | 184 | 120 | — | 133 | 148 | 32 |
| 40-14M-115 | 6F | F56 | 40 | 178,25 | 175,49 | 188 | 135 | — | 133 | 148 | 32 |
| 44-14M-115 | 6F | F61 | 44 | 196,08 | 193,28 | 212 | 140 | — | 133 | 148 | 32 |
| 48-14M-115 | 6F | F62 | 48 | 213,9 | 211,11 | 226 | 150 | — | 133 | 148 | 32 |
| 56-14M-115 | 6F | F66 | 56 | 249,55 | 246,76 | 256 | 150 | — | 133 | 148 | 32 |
| 64-14M-115 | 10WF | F70 | 64 | 285,21 | 282,41 | 296 | 150 | 240 | 133 | 133 | 32 |
| 72-14M-115 | 10A | | 72 | 320,86 | 318,06 | — | 150 | 278 | 133 | 133 | 32 |
| 80-14M-115 | 10A | | 80 | 356,51 | 353,71 | — | 150 | 314 | 133 | 133 | 32 |
| 90-14M-115 | 10A | | 90 | 401,07 | 398,28 | — | 150 | 358 | 133 | 133 | 32 |
| 112-14M-115 | 10A | | 112 | 499,11 | 496,32 | — | 150 | 456 | 133 | 133 | 32 |
| 144-14M-115 | 10A | | 144 | 641,71 | 638,92 | — | 165 | 600 | 133 | 133 | 32 |

### 14M-170

| KOD (Code) | TİP (Type) | FLANŞ (Flange) | DİŞ SAYISI (Z) | Dp | De | Df | Dm | Di | F | L | d |
|---|---|---|---|---|---|---|---|---|---|---|---|
| 28-14M-170 | 6F | F40 | 28 | 124,78 | 122,12 | 128 | 100 | — | 187 | 202 | 32 |
| 29-14M-170 | 6F | F43 | 29 | 129,23 | 126,57 | 138 | 100 | — | 187 | 202 | 32 |
| 30-14M-170 | 6F | F43 | 30 | 133,69 | 130,99 | 138 | 100 | — | 187 | 202 | 32 |
| 32-14M-170 | 6F | F49 | 32 | 142,6 | 139,88 | 154 | 100 | — | 187 | 202 | 32 |
| 34-14M-170 | 6F | F51 | 34 | 151,52 | 148,79 | 160 | 100 | — | 187 | 202 | 32 |
| 36-14M-170 | 6F | F52 | 36 | 160,43 | 157,68 | 168 | 100 | — | 187 | 202 | 32 |
| 38-14M-170 | 6F | F81 | 38 | 169,34 | 166,6 | 184 | 120 | — | 187 | 202 | 32 |
| 40-14M-170 | 6F | F56 | 40 | 178,25 | 175,49 | 188 | 135 | — | 187 | 202 | 32 |
| 44-14M-170 | 6F | F61 | 44 | 196,08 | 193,28 | 212 | 140 | — | 187 | 202 | 32 |
| 48-14M-170 | 6F | F62 | 48 | 213,9 | 211,11 | 226 | 150 | — | 187 | 202 | 32 |
| 56-14M-170 | 6F | F66 | 56 | 249,55 | 246,76 | 256 | 150 | — | 187 | 202 | 32 |
| 64-14M-170 | 10WF | F70 | 64 | 285,21 | 282,41 | 296 | 150 | 240 | 187 | 187 | 32 |
| 72-14M-170 | 10A | | 72 | 320,86 | 318,06 | — | 150 | 278 | 187 | 187 | 32 |
| 80-14M-170 | 10A | | 80 | 356,51 | 353,71 | — | 150 | 314 | 187 | 187 | 32 |
| 90-14M-170 | 10A | | 90 | 401,07 | 398,28 | — | 150 | 358 | 187 | 187 | 32 |
| 112-14M-170 | 10A | | 112 | 499,11 | 496,32 | — | 150 | 456 | 187 | 187 | 32 |
| 144-14M-170 | 10A | | 144 | 641,71 | 638,92 | — | 165 | 600 | 187 | 187 | 32 |

HTD 14M HATVELİ TRİGER DİŞLİLER HTD 14M Timing Belt Pulleys

# GÜÇ DEVİR TABLOSU

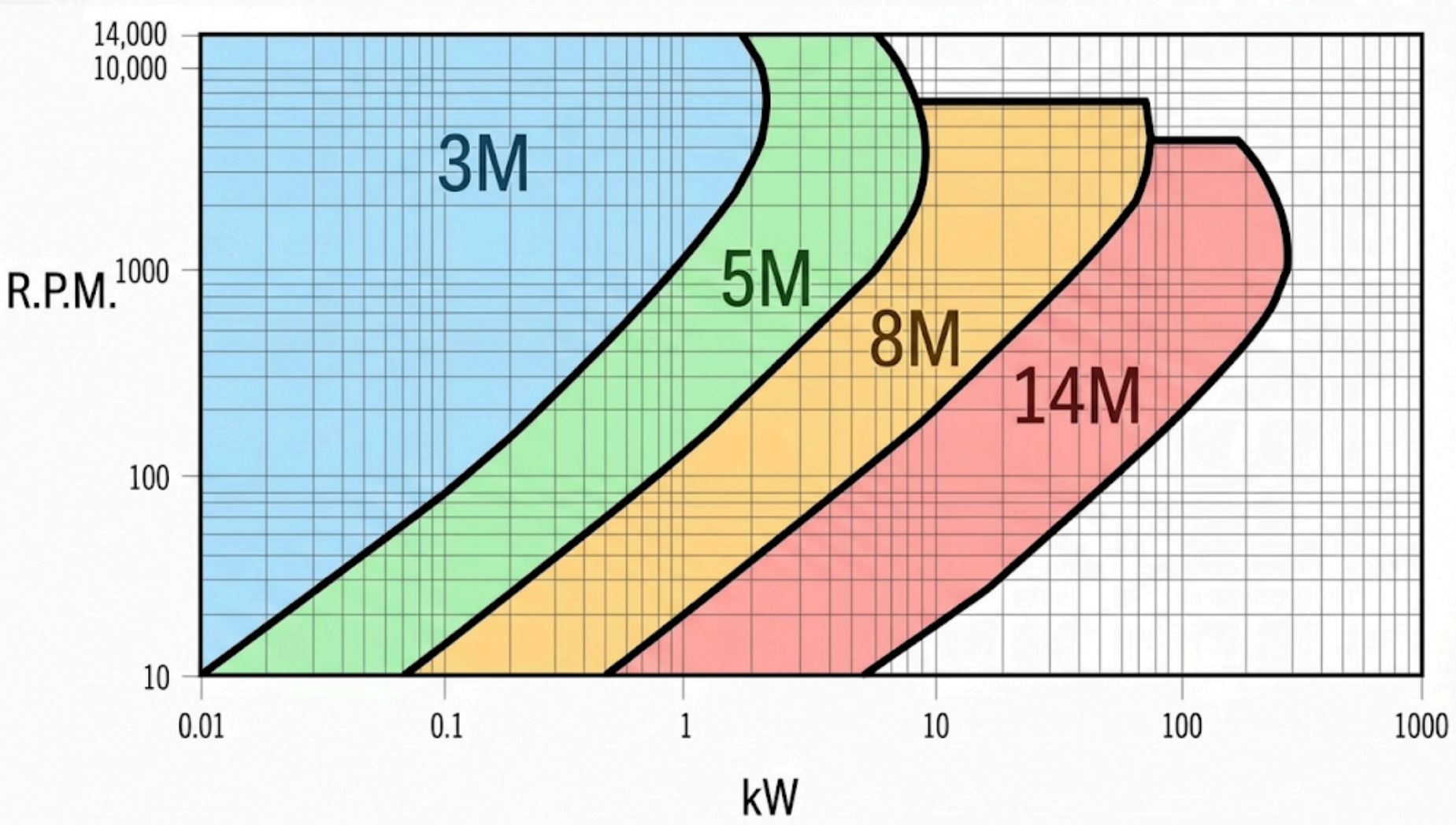


## *14M Plot Delikli Triger Dişliler*

***14M Hatveli plot delikli triger dişliler flanşlı ve flanşsız olarak imal edilmektedir. Alüminyum ve çelik malzemeden imal edilebilir. Büyük güç aktarımlarının olduğu yerlerde yoğun olarak kullanılmaktadır. Standart üretimin yanında özel imalatta yapılabilmektedir.***



# ardmak

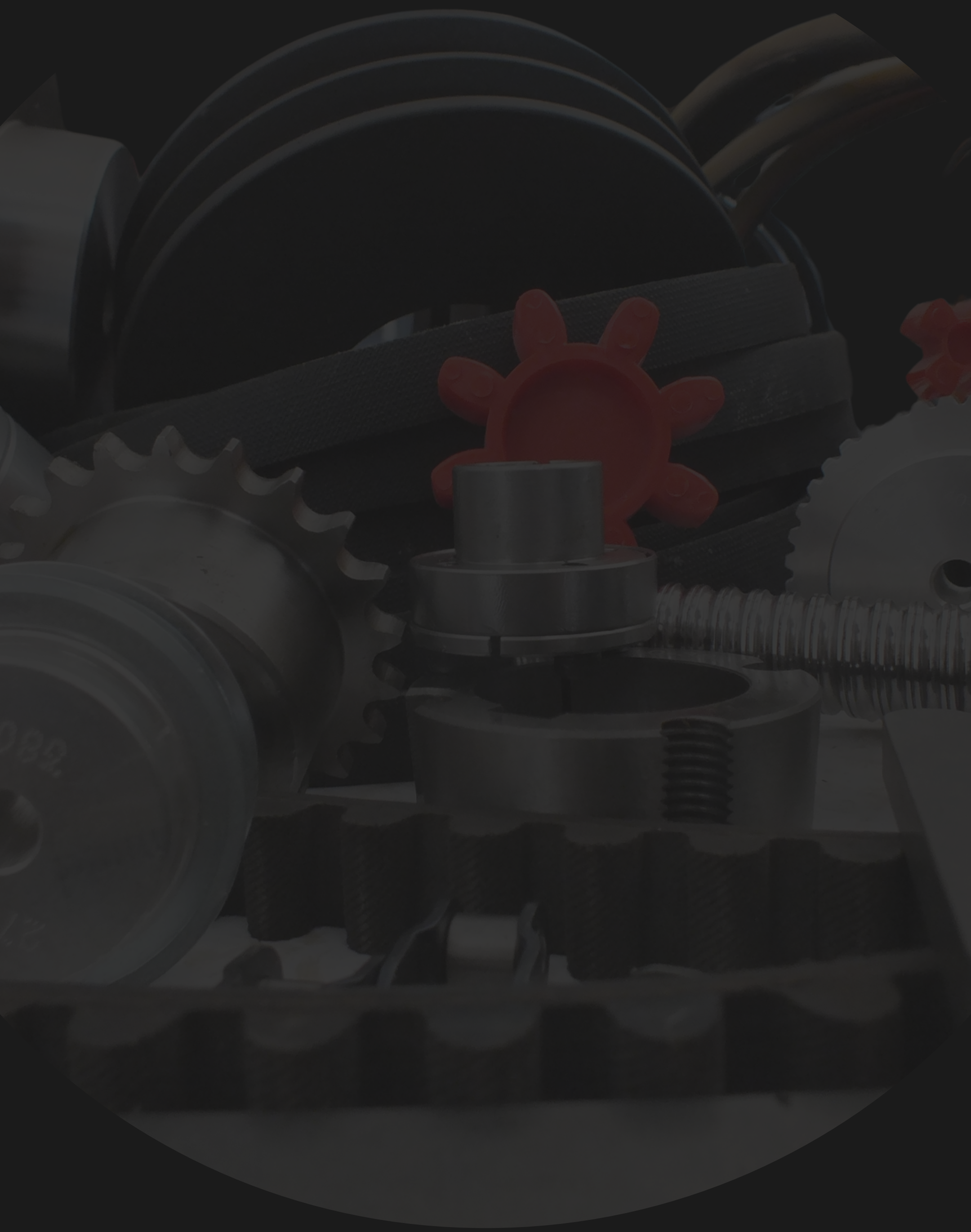

www.ardmakina.com
ard@ardmakina.com
0332 248 64 60